ISSUED FOR PERMITS
07/15/2023

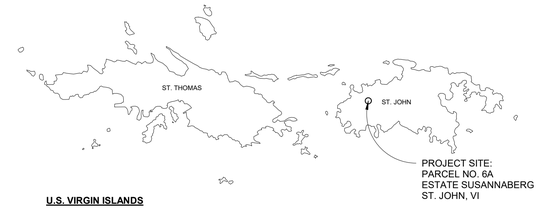

VICINITY MAP

N.T.S.

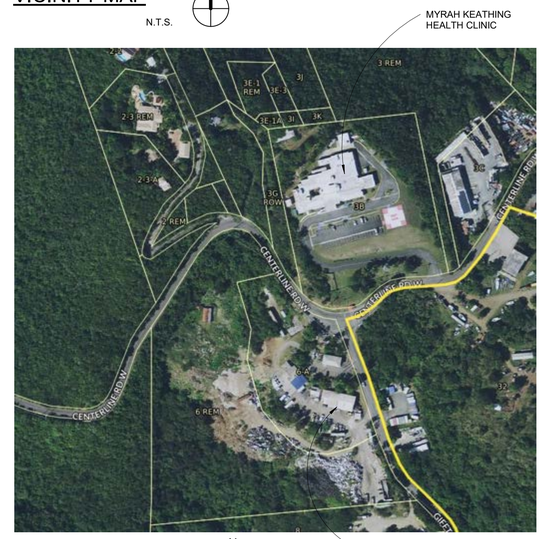

LOCATION MAP

N.T.S.

HURRICANE REPAIRS FOR:

DPW ST. JOHN MAINENANCE BUILDING

PARCEL NO. 6A ESTATE SUSANNABERG
ST. JOHN, U.S. VIRGIN ISLANDS

SLA PROJECT NUMBER:
ODR PROJECT NUMBER:

PROJECT TEAM:

OWNER	AGENCY	AGENCY	PRIME ARCHITECT	ARCHITECT OF RECORD
Government of the United States Virgin Islands	Office of Disaster Recovery	Department of Public Works	Jaredian Design Group	Boschulte Architecture, LLC
HONORABLE ALBERT BRYAN, JR.	HONORABLE Adrienne L. Williams-Octalien	HONORABLE DEREK GABRIEL	John P. Woods, AIA, NCARB	Jeffrey Boschulte, AIA
GOVERNOR	DIRECTOR	COMMISSIONER	PRINCIPAL	PRINCIPAL
GOVERNMENT HOUSE, ST. THOMAS 5047 (21-22) KONGENS GADE ST. THOMAS, VI 00802-6487	VI PUBLIC FINANCE AUTHORITY 1000 KING STREET, SUITE NO. 6 CHRISTIANSTED, VI 00820-4905	DEPARTMENT OF PUBLIC WORKS 8244 SUBBASE ST. THOMAS, VI 00802	5333 RAADETS GADE, SUITE 14, ST. THOMAS, VI 00802-6900	41-42 KONGEN GADE ST. THOMAS, VI 00802
PHONE: 340-774-0001	PHONE: (340) 778-8135	PHONE: (340) 776-4844	PHONE: 340-777-1600	PHONE: 340-777-2375
FAX:	FAX:	FAX: (340) 778-8906	FAX:	FAX:
ATT: Albert Bryan, Jr. Governor	ATT: Michael D. Vante	ATT: Jermaine McClean	ATT: John P. Woods	ATT: Jeffrey T. Boschulte
	EMAIL: mdvante@usvipfa.com	EMAIL: jermaine.mcclean@dpw.vi.gov	EMAIL: jaredian@vipowernet.net	EMAIL: info@boschulte.com

INDEX OF DRAWINGS

BOSCHULTE ARCHITECTURE

JDG

PRIME ARCHITECT

JAREDIAN DESIGN GROUP

5333 RAADETS GADE,
SUITE 14, ST. THOMAS, VI
00802-6900

PHONE: 340-777-1600
FAX:
ATT: John P. Woods

EMAIL: jaredian@vipowernet.net

CONSULTING ARCHITECT

BOSCHULTE ARCHITECTURE, LLC

PO Box 303190
St. Thomas, VI 00803

phone: (340) 777-2375
e-mail: info@boschulte.com
website: www.boschulte.com

2021.007.02
DPW MAINTENANCE BUILDING
PARCEL 6A
ESTATE SUSANNABERG
ST. JOHN, USVI

PROGRESS SET

No.	Description	Date

REVISIONS

No.	Description	Date

Project number	2021.007.02
Date	6/30/2023
Drawn by	JTB
Checked by	JTB

COVER SHEET

G100

Scale: AS SHOWN

GENERAL NOTES

1. PROJECT IDENTIFICATION: HURRICANE REPAIRS FOR OFFICE OF LT. GOVERNOR
2. SITE ZONING: B-2
3. OWNER: GOVERNMENT OF THE VIRGIN ISLANDS
4. USER AGENCY: OFFICE OF LT. GOVERNOR
5. ARCHITECT: BOSCHULTE ARCHITECTURE, LLC, PO BOX 303190, ST. THOMAS, U.S.V.I. 00802
6. KEEP ACCESS EASEMENTS, DRIVEWAYS, AND ENTRANCES SERVING PREMISES AND ADJACENT PROPERTIES CLEAR AND AVAILABLE TO OWNER AND EMERGENCY VEHICLES AT ALL TIMES. DO NOT USE THESE AREAS FOR PARKING OR STORAGE OF MATERIALS.
7. COORDINATE, SCHEDULE, AND APPROVE PERMANENT AND TEMPORARY UTILITIES, INCLUDING THOSE NECESSARY TO MAKE CONNECTIONS FOR TEMPORARY SERVICES.
8. DO NOT DISTURB PORTIONS OF THE SITE BEYOND AREAS IN WHICH THE WORK IS INDICATED.
9. REMOVE WASTE MATERIALS FROM PROJECT SITE AND LEGALLY DISPOSE OF THEM IN A LANDFILL ACCEPTABLE TO AUTHORITIES HAVING JURISDICTION. CONTRACTOR SHALL BE RESPONSIBLE FOR REMOVAL AND LEGAL DISPOSAL OFF-SITE FOR ALL DEMOLITION AND CONSTRUCTION WASTE DEBRIS, AND FOR ANY DUMPSTER, TRUCKING AND LANDFILL FEES.
10. ALL WORK DONE SHALL COMPLY WITH THE LATEST EDITION OF THE VIRGIN ISLANDS BUILDING CODE.
11. JOB SITE VISITS BY THE OWNER OR ARCHITECT DO NOT CONSTITUTE AN OFFICIAL INSPECTION UNLESS SPECIFICALLY REQUESTED BY THE CONTRACTOR.
12. THE ARCHITECT SHALL BE NOTIFIED A MINIMUM OF 48 HOURS PRIOR TO START OF CONSTRUCTION BY THE CONTRACTOR.
13. DIMENSIONS, WHERE SHOWN ON DRAWING, ARE FOR ESTIMATING PURPOSES ONLY. CONTRACTOR TO FIELD VERIFY EXISTING SURFACES PRIOR TO ORDERING OF ANY MATERIALS AND PRIOR TO COMMENCING WORK. DO NOT SCALE DRAWINGS.
14. DEVIATION FROM THE CONSTRUCTION DOCUMENTS WITHOUT PRIOR WRITTEN CONSENT OF THE ARCHITECT MAY BE CAUSE FOR THE WORK TO BE REJECTED BY THE ARCHITECT. THE ARCHITECT SHALL NOT BE HELD LIABLE FOR ANY DAMAGES OR INJURIES WHICH MAY OCCUR DUE TO ANY UNAPPROVED DEVIATION FROM THE CONSTRUCTION DOCUMENTS.
15. CONTRACTOR SHALL NOTIFY CONSTRUCTION MANAGER AND/OR ARCHITECT IMMEDIATELY IN WRITING IF CONDITIONS ENCOUNTERED IN FIELD ARE DIFFERENT FROM CONDITIONS INDICATED ON DRAWINGS.

General Notes

1" = 1'-0"

COMMON ABBREVIATIONS

ARCH.	ARCHITECT
B/	BOTTOM OF
BRG.	BEARING
BOTT.	BOTTOM
C/C	CENTER-TO-CENTER
C.J.	CONTROL JOINT
CLR.	CLEAR
COL.	COLUMN
CONC.	CONCRETE
CONN.	CONNECTION
CONT.	CONTINUOUS
COORD.	COORDINATE
CMU	CONCRETE MASONRY UNIT
DIM.	DIMENSION
DIA.	DIAMETER
DIST.	DISTANCE
DWGS.	DRAWINGS
EL.	ELEVATION
E.F.	EACH FACE
EMBED.	EMBEDMENT
ENG.	ENGINEER
E.O.R.	ENGINEER OF RECORD
EQ.	EQUAL
E.S.	EACH SIDE
E.W.	EACH WAY
EXP.	EXPANSION
EXT.	EXTERIOR
FABR.	FABRICATOR
F.F.	FINISHED FLOOR
FFE	FINISHED FLOOR ELEVATION
FTG.	FOOTING
GA.	GAUGE
GALV.	GALVANIZED
HKD.	HOOKED
HORIZ.	HORIZONTAL
H.S.	HEADED STUD
IN.	INCHES
INFO.	INFORMATION
INT.	INTERIOR
K	KIPS
KSI	KIPS PER SQUARE INCH
LLH	LONG LEG HORIZONTAL
L.W.	LONG WAYS
MANUF.	MANUFACTURER
MAX.	MAXIMUM
MECH.	MECHANICAL
MIN.	MINIMUM
O.C.	ON CENTER
PL.	PLATE
PREFAB.	PREFABRICATED
PSF	POUNDS PER SQUARE FOOT
PSI	POUNDS PER SQUARE INCH
P.T.	PRESSURE TREATED
QTY.	QUANTITY
REF.	REFERENCE
REINF.	REINFORCED OR REINFORCING
SCH.	SCHEDULE
S.F.	SQUARE FEET OR STEPPED FOOTING
SQU.	SQUARE
STL.	STEEL
STRUC.	STRUCTURAL
S.W.	SHORT WAYS
T/	TOP OF
TYP.	TYPICAL
U.N.O.	UNLESS OTHERWISE NOTED
VCJ	VERTICAL CONTROL JOINT
VMCJ	VERTICAL MASONRY CONTROL JOINT
W/	WITH
WWF	WELDED WIRE FABRIC

2 Abbreviations

1" = 1'-0"

BOSCHULTE ARCHITECTURE

ARCHITECT

BOSCHULTE ARCHITECTURE, LLC

PO Box 303190
St. Thomas: VI 00803

41-42 Kongens Gade
St. Thomas, VI 00802

phone: (340) 777-2375
e-mail: info@boschulte.com
website: www.boschulte.com

2021.007.02

DPW MAINTENANCE BUILDING
PARCEL 6A
ESTATE SUSANNABERG
ST. JOHN, USVI

PROGRESS SET

No.	Description	Date
1	SCHEMATIC DESIGN	04/06/2022
2	SCHEMATIC DESIGN	04/21/2022
3	DESIGN DEVELOPMENT	06/06/2022
4	CONSTRUCTION DOCUMENTS 50%	08/22/2022

REVISIONS

No.	Description	Date

Project number	2021.007.02
Date	6/30/2023
Drawn by	BJS
Checked by	JTB

BUILDING CODE SUMMARY

G101

Scale: AS SHOWN

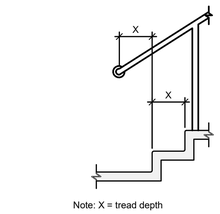

FIGURE 505.10.3
BOTTOM HANDRAIL EXTENSION
AT STAIRS

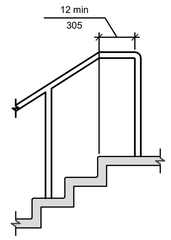

FIGURE 505.10.2
TOP HANDRAIL EXTENSION
AT STAIRS

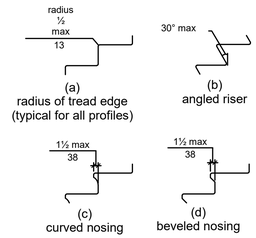

FIGURE 504.5
STAIR NOSINGS

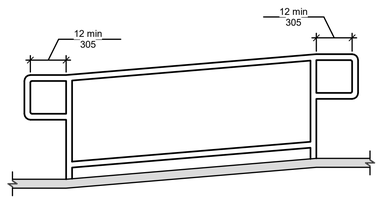

FIGURE 505.10.1
TOP AND BOTTOM
HANDRAIL EXTENSION AT RAMPS

FIGURE 505.6
HORIZONTAL
PROJECTIONS BELOW
GRIPPING SURFACE

FIGURE 505.5
HANDRAIL
CLEARANCE

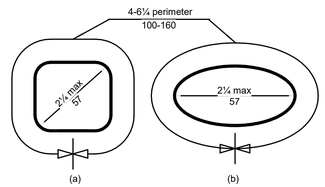

FIGURE 505.7.2
HANDRAIL NON-CIRCULAR
CROSS SECTION

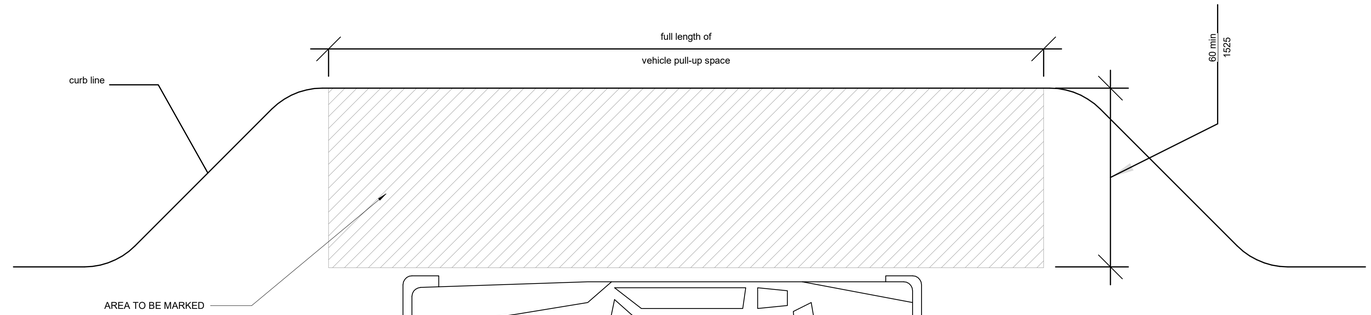

FIGURE 503.3
PASSENGER LOADING ZONE ACCESS AISLE

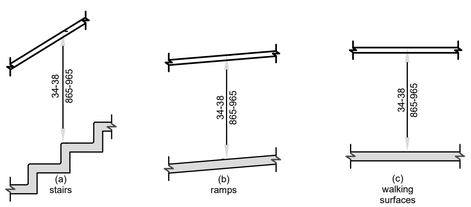

FIGURE 505.4
HANDRAIL HEIGHT

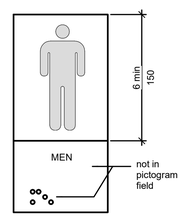

FIGURE 703.6
PICTOGRAM FIELD

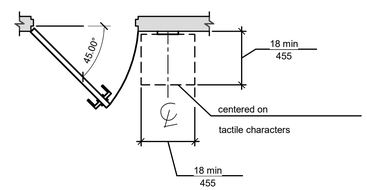

FIGURE 703.4.2
LOCATION OF TACTILE SIGNS
AT DOORS

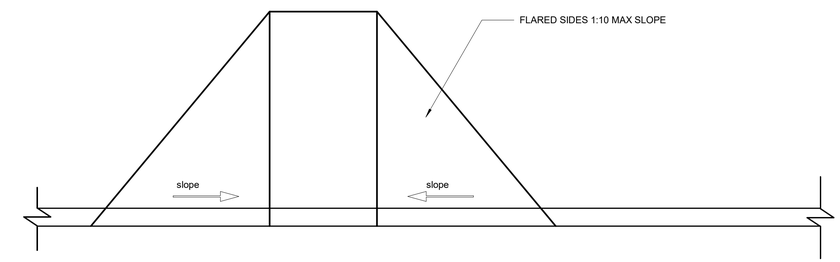

FIGURE 406.3
SIDES OF CURB RAMPS

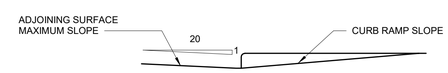

GENERAL SITE AND BUILDING ELEMENTS

1

1/2" = 1'-0"

BOSCHULTE ARCHITECTURE

ARCHITECT
BOSCHULTE ARCHITECTURE, LLC
PO Box 303190
St. Thomas, VI 00803
41-42 Kongens Gade
St. Thomas, VI 00802
phone: (340) 777-2375
e-mail: info@boschulte.com
website: www.boschulte.com

2021.007.02
DPW MAINTENANCE BUILDING
PARCEL 6A
ESTATE SUSANNABERG
ST. JOHN, USVI

PROGRESS SET

No.	Description	Date
1	SCHEMATIC DESIGN	04/06/2022
2	SCHEMATIC DESIGN	04/21/2022
3	DESIGN DEVELOPMENT	06/06/2022
4	CONSTRUCTION DOCUMENTS 50%	08/22/2022

REVISIONS

No.	Description	Date

Project number	2021.007.02
Date	6/30/2023
Drawn by	BJS
Checked by	JTB

ADA COMPLIANCE AND
MOUNTING HEIGHTS

G103

Scale: AS SHOWN

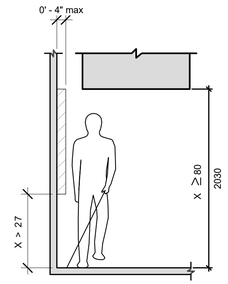

FIGURE 307.2
LIMITS OF PROTRUDING OBJECTS

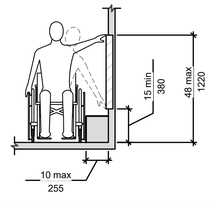

FIGURE 308.3.1
UNOBSTRUCTED SIDE REACH

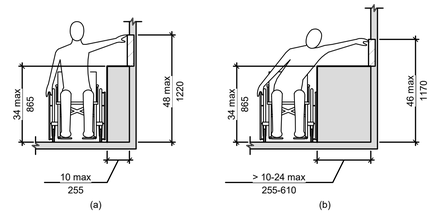

FIGURE 308.3.2
OBSTRUCTED HIGH SIDE REACH

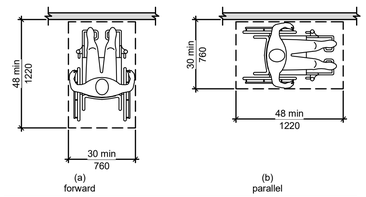

FIGURE 305.5
POSITION OF CLEAR FLOOR OR GROUND SPACE

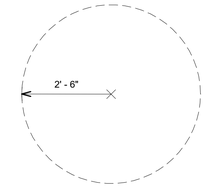

CIRCULAR TURNING SPACE

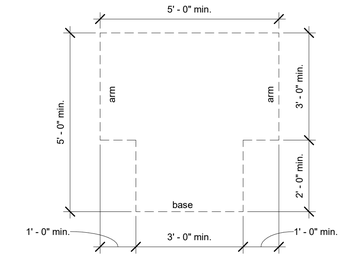

T-SHAPED TURNING SPACE

3 FLOOR CLEARANCES
1/2" = 1'-0"

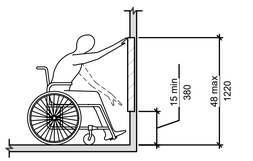

FIGURE 308.2.1
UNOBSTRUCTED FORWARD REACH

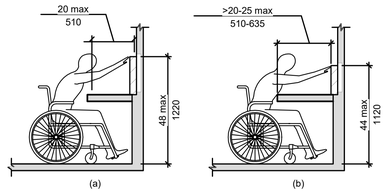

FIGURE 308.2.2
OBSTRUCTED HIGH FORWARD REACH

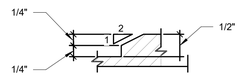

FIGURE 303.3
BEVELED CHANGE IN LEVEL

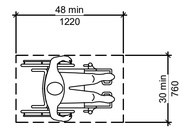

FIGURE 305.3
CLEAR FLOOR OR GROUND SPACE

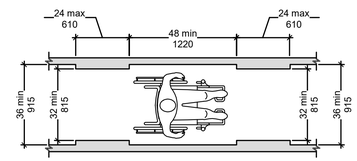

FIGURE 403.5.1
CLEAR WIDTH OF AN ACCESSIBLE ROUTE

1 BUILDING BLOCKS
3/8" = 1'-0"

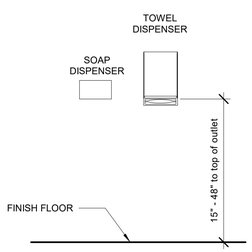

ACCESSORY MOUNTING HEIGHTS

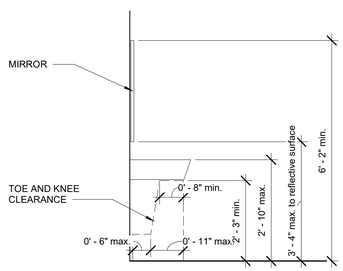

LAVATORY ELEVATION

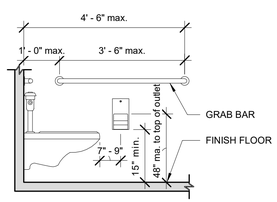

TOILET PAPER DISPENSER

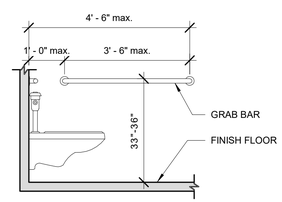

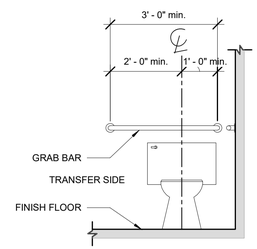

WALL/ FLOOR MOUNTED TOILET ELEVATIONS

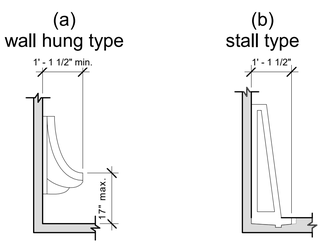

URINAL ELEVATIONS

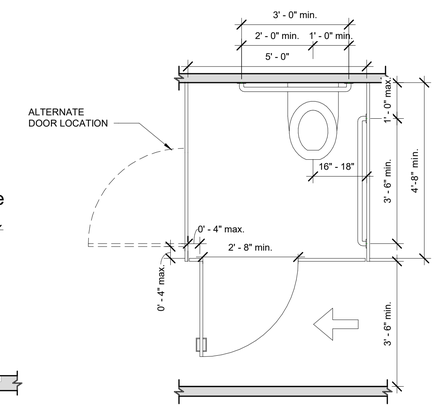

WHEELCHAIR ACCESSIBLE TOILET COMPARTMENT PLAN

4 MOUNTING HEIGHTS
1/2" = 1'-0"

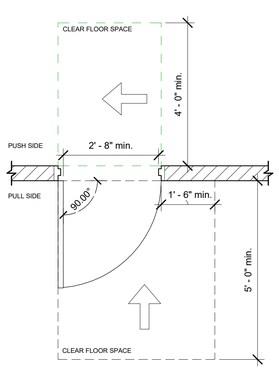

FRONT APPROACH

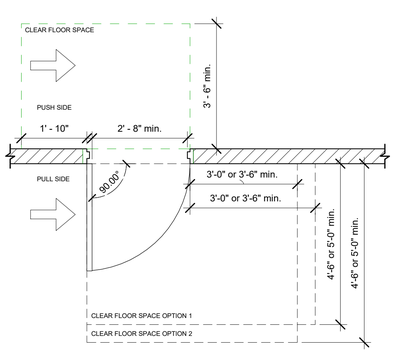

HINGE APPROACH

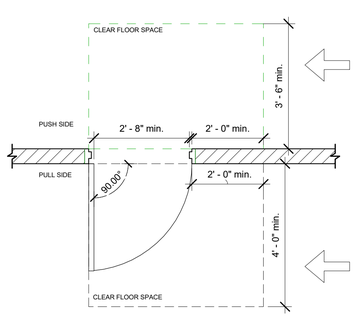

LATCH APPROACH

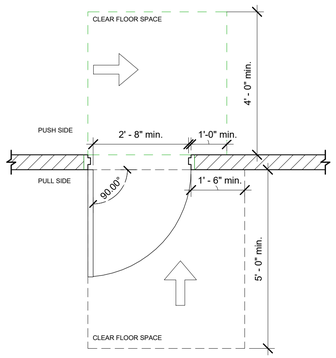

FRONT APPROACH (WITH CLOSER AND LATCH)

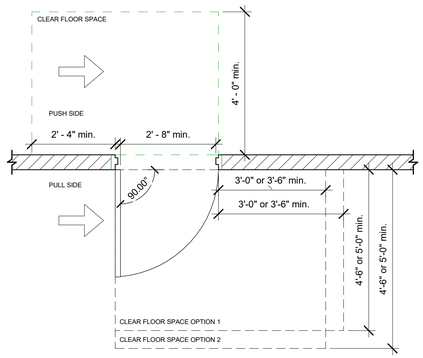

HINGE SIDE APPROACH (WITH CLOSER AND LATCH)

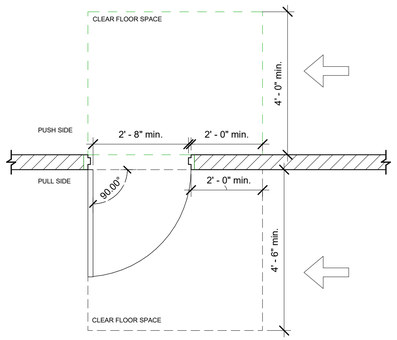

LATCH SIDE APPROACH (WITH CLOSER)

2 DOOR CLEARANCES
1/2" = 1'-0"

BOSCHULTE ARCHITECTURE

ARCHITECT
BOSCHULTE ARCHITECTURE, LLC
PO Box 303190
St. Thomas: VI 00803
41-42 Kongens Gade
St. Thomas, VI 00802
phone: (340) 777-2375
e-mail: info@boschulte.com
website: www.boschulte.com

2021.007.02
DPW MAINTENANCE BUILDING
PARCEL 6A
ESTATE SUSANNABERG
ST. JOHN, USVI

PROGRESS SET

No.	Description	Date
1	SCHEMATIC DESIGN	04/06/2022
2	SCHEMATIC DESIGN	04/21/2022
3	DESIGN DEVELOPMENT	06/06/2022
4	CONSTRUCTION DOCUMENTS 50%	08/22/2022

REVISIONS

No.	Description	Date

Project number	2021.007.02
Date	6/30/2023
Drawn by	BJS
Checked by	JTB

ADA COMPLIANCE AND MOUNTING HEIGHTS

G501

Scale: AS SHOWN

DIVISION I- GENERAL REQUIREMENTS AND COVENANTS

1. ONLY APPROVED MATERIALS SHALL BE USED

CONTRACTOR SHALL USE ONLY MATERIALS IN THE WORKS THAT MEET THE REQUIREMENTS OF THESE SPECIFICATIONS, RELEVANT SECTIONS OF FLORIDA DEPARTMENT OF TRANSPORTATION PUBLICATION "STANDARD SPECIFICATIONS FOR ROAD AND BRIDGE CONSTRUCTION 2000."

2. INSPECTION AND TESTS AT SOURCE OF SUPPLY

2.1 GENERAL: IF THE VOLUME, PROGRESS OF THE WORK, AND OTHER CONSIDERATIONS WARRANT, THE ENGINEER OF RECORD(E.O.R.) MAY INSPECT THE MATERIALS AT THE SOURCE OF SUPPLY.

2.2 COOPERATION BY CONTRACTOR: THE CONTRACTOR SHALL PROVIDE THE E.O.R. WITH FREE ENTRY AT ALL TIMES TO SUCH PARTS OF THE PLANT THAT CONCERN THE MANUFACTURE OR PRODUCTION OF THE MATERIALS ORDERED.

3. CONTROL BY SAMPLES AND TESTS

3.1 PAVEMENT SAMPLES: FOR BOTH BASE COURSE AND SURFACE COURSE PAVEMENTS, THE CONTRACTOR SHALL FURNISH SAMPLES TAKEN FROM THE COMPLETED WORK FROM ANY LOCATION THAT THE E.O.R. INDICATES, AND IMMEDIATELY REPLACE THE AREAS SO REMOVED WITH MATERIALS AND CONSTRUCTION THAT MEET THE REQUIREMENTS OF THESE SPECIFICATIONS AND TO THE LINE AND GRADE OF THE IMMEDIATE SURROUNDING PAVEMENT SURFACE.

3.2 APPLICABLE STANDARDS: METHODS OF SAMPLING AND TESTING MATERIALS SHALL BE IN ACCORDANCE WITH STANDARDS OF AASHTO OR ASTM.

3.3 SIEVES: USE SIEVES MEETING THE REQUIREMENTS OF AASHTO M 92.

3.4 INSPECTION AT PLANTS: CONTRACTOR SHALL PROVIDE THE ENGINEER WITH ACCESS TO ALL PARTS OF ALL PAVING OR OTHER PLANTS CONNECTED WITH THE WORK TO OBSERVE WEIGHTS OR PROPORTIONS OR CHARACTER OF MATERIALS AND TO DETERMINE TEMPERATURE USED IN PREPARING MATERIALS AND MIXTURES.

3.5 COMPACTION TESTS - PAVEMENT MATERIALS

3.5.1 WHEN REQUESTED BY THE ENGINEER OF RECORD (E.O.R.): NUCLEAR DENSITY OR OTHER APPROVED COMPACTION TESTS SHALL BE CARRIED OUT ON EACH LAYER OF COMPACTED BASE AND EMBANKMENTS. TWENTY-FOUR HOURS NOTICE OF ANY TEST SHALL BE GIVEN TO THE PROJECT ENGINEER AND COPIES OF THE TEST RESULT SHALL BE FORWARDED TO THE E.O.R. AS SOON AS POSSIBLE. THE CONTRACTOR SHALL KEEP COPIES OF THE TIME AND LOCATION OF ALL TESTS.

3.5.2 FIELD-TESTING: SHALL CONFORM TO ASTM STANDARDS OR APPROVED EQUIVALENT. MOISTURE DENSITY CURVES SHALL CONFORM TO ASTM D698-78; SIEVE ANALYSES TO ASTM C136-84A; AND FIELD DENSITIES TO ASTM D2167-84 OR TO ASTM D2922-81.

4. STORAGE OF MATERIALS

4.1 METHOD OF STORAGE: MATERIALS SHALL BE STORED IN SUCH A MANNER AS TO PRESERVE THEIR QUALITY AND FITNESS FOR THE WORK TO FACILITATE PROMPT INSPECTION AND TO MINIMIZE THE NOISE IMPACTS ON SENSITIVE RECEIVERS.

5. DEFECTIVE MATERIALS

5.1 THE FOLLOWING MATERIALS SHALL BE CONSIDERED DEFECTIVE: ALL MATERIALS NOT MEETING THE REQUIREMENTS OF THESE SPECIFICATIONS; MATERIALS THAT ARE OR HAVE BEEN IMPROPERLY STORED; AND MATERIALS THAT ARE MIXED WITH EXCESS OF CLAY, COAL , STICKS, BURLAP, HAY, STRAW, LOAM OR EARTH, OR OTHER DEBRIS.

6. LEGAL REQUIREMENTS AND RESPONSIBNILITY TO THE PUBLIC

6.1 OCCUPATIONAL SAFETY AND HEALTH REQUIREMENTS: THE CONTRACTOR SHALL TAKE ALL PRECAUTIONS NECESSARY FOR THE PROTECTION OF LIFE, HEALTH AND GENERAL OCCUPATIONAL WELFARE OF ALL PERSONS INCLUDING THE CONTRACTORS EMPLOYEES AND AUTHORIZED VISITORS TO THE SITE.

7. SANITARY PROVISIONS

7.1 THE CONTRACTOR SHALL PROVIDE AND MAINTAIN, IN A NEAT AND SANITARY CONDITION, SUCH ACCOMMODATIONS FOR THE USE OF HIS EMPLOYEES AS ARE NECESSARY TO COMPLY WITH THE REQUIREMENTS AND REGULATIONS OF THE UNITED STATES VIRGIN ISLANDS (USVI).

8. CONTROL OF CONTRACTOR'S EQUIPMENT

8.1 PROTECTION FROM DAMAGE BY TRACTOR-TYPE EQUIPMENT: THE CONTRACTOR SHALL TAKE POSITIVE MEASURES TO ENSURE THAT TRACTOR-TYPE EQUIPMENT DOES NOT DAMAGE THE ROAD. IF SUCH DAMAGE SHOULD OCCUR, CONTRACTOR SHALL REPAIR IT WITHOUT DELAY, AT NO EXPENSE TO THE OWNER AND SUBJECT TO THE APPROVAL OF THE E.O.R.

9. PRESERVATION OF PROPERTY

9.1 UTILITIES: CONTRACTOR SHALL NOT COMMENCE WORK AT POINTS WHERE THE CONSTRUCTION OPERATIONS ARE ADJACENT TO UTILITY FACILITIES OR OTHER PROPERTY, UNTIL MAKING ARRANGEMENTS WITH THE UTILITY FACILITIES TO PROTECT AGAINST DAMAGE THAT MIGHT RESULT IN EXPENSE, LOSS, DISRUPTION IN SERVICE OR OTHER INCONVENIENCE TO THE PUBLIC OR THE OWNERS.

10. RECORD OF CONSTRUCTION MATERIALS

10.1 GENERAL: FOR ALL CONSTRUCTION MATERIALS USED IN CONSTRUCTION OF THE PROJECT, THE CONTRACTOR SHALL PRESERVE FOR THE E.O.R'S INSPECTION THE INVOICES AND RECORDS OF MATERIALS FOR A PERIOD OF THREE YEARS FROM THE DATE OF COMPLETION OF THE PROJECT. THIS ALSO APPLIES TO MATERIALS PURCHASED BY SUBCONTRACTORS.

DIVISION II- CONSTRUCTION DETAILS

1. CONSTRUCTION EQUIPMENT-GENERAL REQUIREMENTS

1.0 GENERAL: UNLESS RESTRICTED TO A SPECIFIC TYPE BY THE CONTRACT DOCUMENTS OR THE E.O.R., THE CONTRACTOR MAY PERFORM THE WORK USING EQUIPMENT, TOOLS, MACHINERY, ETC., OF HIS OWN CHOOSING. NOTE THAT FACILITIES TO BE CONSTRUCTED UNDER THE CONTRACT ARE ADEQUATE TO SUPPORT ONLY THEIR DESIGN LOADS IN THEIR COMPLETED CONSTRUCTION STAGE. IF THE CONTRACTOR'S EQUIPMENT OR PROCEDURES DURING CONSTRUCTION DAMAGE ANY PART OF THE FACILITY, THE CONTRACTOR SHALL REPLACE OR REPAIR IT AS DIRECTED BY THE E.O.R . AT NO EXPENSE TO THE OWNER.

2. MAINTENANCE OF TRAFFIC

2.1 DESCRIPTION: THE CONTRACTOR SHALL MAINTAIN TRAFFIC WITHIN THE LIMITS OF THE PROJECT FOR THE DURATION OF THE CONSTRUCTION PERIOD, INCLUDING ANY TEMPORARY SUSPENSIONS OF THE WORK. CONTRACTOR SHALL CONSTRUCT AND MAINTAIN ANY DETOUR FACILITIES, PROVIDE NECESSARY FACILITIES FOR ACCESS TO RESIDENCES, BUSINESSES, ETC., ALONG THE PROJECT. CONTRACTOR SHALL FURNISH AND APPLY CALCIUM CHLORIDE OR WATER ON THE SUBGRADE, UNSURFACD BASE, OR OTHER UNSURFACED TRAVELED WAYS IN ORDER TO CONTROL DUST DURING THE CONSTRUCTION OPERATIONS.

3. TRAFFIC CONTROL

3.1 STANDARDS: FHWA'S MUTCD PART VI IS THE MINIMUM STANDARDS FOR TRAFFIC CONTROL FOR HIGHWAY CONSTRUCTION, MAINTENANCE AND UTILITY OPERATIONS. CONTRACTOR SHALL UNDERSTAND THE STANDARDS ESTABLISHED IN THE AFOREMENTIONED MANUAL CONSTITUTE THE MINIMUM REQUIREMENTS FOR NORMAL CONDITIONS. THE E.O.R. MAY REQUIRE ADDITIONAL TRAFFIC CONTROL DEVICES, WARNING DEVICES, BARRIERS, OR OTHER SAFETY DEVICES WHERE UNUSUAL, COMPLEX, OR PARTICULARLY HAZARDOUS CONDITIONS EXIST.

3.2 MAINTENANCE OF DEVICES AND BARRIERS:P CONTRACTOR SHALL KEEP TRAFFIC CONTROL DEVICES, WARNING DEVICES, AND BARRIERS IN THE CORRECT POSITION PROPERLY DIRECTED, CLEARLY VISIBLE AND CLEAN AT ALL TIMES. CONTRACTOR SHALL IMMEDIATELY REPAIR, REPLACE OR CLEAN DAMAGED, DEFACED, OR DIRTY DEVICES OR BARRIERS AND HAVE THE E.O.R. APPROVE THEM FOR USE.

4. PREVENTION, CONTROL AND ABATEMENT OF EROSION AND WATER POLLUTION

4.1 DESCRIPTION: CONTRACTOR SHALL PROVIDE EROSION CONTROL MEASURES ON THE PROJECT AND IN AREAS OUTSIDE THE RIGHT-OF-WAY WHERE WORK IS ACCOMPLISHED IN CONJUNCTION WITH THE PROJECT, SO AS TO PREVENT POLLUTION OF WATER, DETRIMENTAL EFFECTS TO PUBLIC OR PRIVATE PROPERTY ADJACENT TO THE PROJECT RIGHT-OF-WAY AND DAMAGE TO WORK ON THE PROJECT. CONTRACTOR SHALL CONSTRUCT AND MAINTAIN TEMPORARY EROSION CONTROL FEEATURES OR, WHERE PRACTICAL, CONSTRUCT AND MAINTAIN PERMANENT EROSION CONTROL FEATURES AS SHOWN IN THE PLANS OR AS MAY BE DIRECTED BY THE E.O.R.

5. CLEARING AND GRUBBING

5.1 DESCRIPTION: CONTRACTOR SHALL CLEAR AND GRUB WITHIN THE AREAS OF THE ROADWAY RIGHT-OF-WAY AND OF BORROW PITS, SAND-CLAY BASE MATERIAL PITS, LATERAL DITCHES AND ANY OTHER AREAS SHOWN IN THE PLANS TO BE CLEARED AND GRUBBED. REMOVE AND DISPOSE OF ALL TREES, STUMPS, ROOTS, AND OTHER SUCH PROTRUDING OBJECTS, AND BUILDINGS, STRUCTURES, APPURTENANCES, EXISTING FLEXIBLE ASPHALT PAVEMENT, AND OTHER FACILITIES NECESSARY TO PREPARE THE AREA FOR THE PROPOSED CONSTRUCTION, AND REMOVE AND DISPOSE OF ALL PRODUCT AND DEBRIS NOT REQUIRED TO BE SALVAGED OR NOT REQUIRED TO COMPLETE THE CONSTRUCTION.

CONTRACTOR SHALL ALSO PERFORM MISCELLANEOUS WORK THE E.O.R. CONSIDERS NECESSARY FOR THE COMPLETE PREPARATION OF THE OVERALL PROJECT SITE AS FOLLOWS:

(a) PLUG ANY WATER WELLS THAT ARE ENCOUNTERED WITHIN THE RIGHT-OF-WAY AND THAT ARE TO BE ABANDONED.

(b) LEVEL THE TERRAIN OUTSIDE THE LIMITS OF CONSTRUCTION FOR PURPOSES OF FACILITATING MAINTENANCE AND OTHER POST-CONSTRUCTION OPERATIONS.

(c) TRIM TREES AND SHRUBS WITHIN THE PROJECT RIGHT-OF-WAY THAT ARE IDENTIFIED IN THE PROJECT DOCUMENTS.

6. STABILIZING

6.1 DESCRIPTION: STABILIZE DESIGNATED PORTIONS OF THE ROADBED TO PROVIDE A FIRM AND UNYIELDING SUBGRADE, HAVING THE REQUIRED BEARING VALUE SPECIFIED IN THE PLANS. WHEN SPECIFIED IN THE PLANS, PROVIDE ADDITIONAL STRENGTHENING OF THE SUBBASE BY ADDITIONAL STABILIZING OF THE UPPER PORTION OF THE PREVIOUSLY STABILIZED SUBGRADE, WITHIN THE LIMITS SPECIFIED.

6.2 MAXIMUM PARTICLE SIZE OF MIXED MATERIALS: AT THE COMPLETION OF THE MIXING, ENSURE THAT THE GRADATION OF THE MATERIAL WITHIN THE LIMITS OF THE AREA BEING STABILIZED IS SUCH THAT 97% WILL PASS A 3 1/2" (90MM) SIEVE AND THAT THE MATERIAL DOES NOT HAVE A PLASTICITY INDEX GREATER THAN EIGHT OR LIQUID LIMIT GREATER THAN THIRTY.

6.3 DENSITY REQUIREMENTS: WITHIN THE ENTIRE LIMITS OF THE WIDTH AND DEPTH OF THE AREAS TO BE STABILIZED, OBTAIN A MAXIMUM DENSITY OF 98% OF THE MAXIMUM DENSITY AS DETERMINED BY AASHTO T180.

7. GRANULAR BASE

7.1 MATERIALS: MATERIALS SHALL MEET THE REQUIREMENTS OF THE FEDERAL HIGHWAY ADMINISTRATION (FHWA) STANDARD. THE CONTRACTOR MAY USE MORE THAN ONE SOURCE OF GRANULAR BASE ON A SINGLE CONTRACT PROVIDED THAT A SINGLE SOURCE IS USED THROUGHOUT THE ENTIRE WIDTH AND DEPTH OF A SECTION OF BASE. OBTAIN APPROVAL FROM THE E.O.R. BEFORE PLACING MATERIAL FROM MORE THAN ONE SOURCE.

7.2 METHOD OF SPREADING: CONTRACTOR SHALL SPREAD THE ROCK UNIFORMLY. REMOVE ALL SEGREGATED AREAS OF FINE OR COURSE ROCK AND REPLACE THEM WITH PROPERLY GRADED ROCK.

7.3 GRANULAR BASE FOR SHOULDER PAVEMENT: UNLESS OTHERWISE PERMITTED, CONTRACTOR SHALL COMPLETE ALL GRANULAR BASE SHOULDER CONSTRUCTION AT ANY PARTICULAR LOCATION BEFORE PLACING THE FINAL COURSE OF PAVEMENT ON THE TRAVELED ROADWAY. WHEN DUMPING MATERIAL FOR THE CONSTRUCTION OF A GRANULAR BASE ON THE SHOULDERS, DO NOT ALLOW MATERIAL CAPABLE OF SCARRING OR CONTAMINATING THE PAVEMENT SURFACE ON THE ADJACENT PAVEMENT. IMMEDIATELY SWEEP OFF ANY GRANULAR MATERIAL THAT IS DEPOSITED ON THE SURFACE COURSE.

7.4 DENSITY REQUIREMENTS: WHEN PROPER MOISTURE CONDITIONS ARE OBTAINED, COMPACT MATERIAL TO NOT LESS THAN 98% OF MAXIMUM DENSITY DETERMINED BY AASHTO T180. COMPACT THE GRANULAR BASE FOR SHOULDER PAVEMENT TO NOT LESS THAN 95% OF MAXIMUM DENSITY DETERMINED BY AASHTO T180.

7.5 PRIMING: CONTRACTOR SHALL APPLY THE PRIME COAT ONLY WHEN THE BASE MEETS THE SPECIFIED DENSITY REQUIREMENTS AND WHEN THE MOISTURE CONTENT IN THE TOP HALF OF THE BASE DOES NOT EXCEED 90% OF THE OPTIMUM MOISTURE OF THE BASE MATERIAL. AT THE TIME OF PRIMING ENSURE THAT THE BASE IS FIRM, UNYIELDING AND IN SUCH CONDITION THAT NO UNDUE DISTORTION WILL OCCUR.

7.6 MAINTAINING: MAINTAIN THE TRUE CROWN AND TEMPLATE, WITH NO RUTTING OR OTHER DISTORTION WHEN APPLYING THE SURFACE COURSE.

8. PRIME AND TACK COATS FOR BASE COURSES

8.1 DESCRIPTION: CONTRACTOR SHALL APPLY PRIME COATS ON PREVIOUSLY PREPARED BASES, AND APPLY TACK COATS ON PREVIOUSLY PREPARED BASES AND ON EXISTING PAVEMENT SURFACES.

8.2 PRIME COAT: FOR PRIME COAT, CONTRACTOR SHALL USE CUTBACK ASPHALT GRADE RC-70 OR RC-250 MEETING REQUIREMENTS OF FDOT STANDARD SPECIFICATIONS, SECTION 916-3.

8.3 COVER MATERIAL FOR PRIME COAT: UNIFORMLY COVER THE PRIME BASE BY A LIGHT APPLICATION OF COVER MATERIAL. THE CONTRACTOR MAY USE EITHER SAND OR SCREENINGS FOR COVER MATERIAL. FOR THE SAND, MEET THE REQUIREMENTS OF FDOT STANDARD SPECIFICATIONS SECTION 902-2 OR 902-6, AND FOR THE SCREENINGS MEET THE REQUIREMENTS OF FDOT STANDARD SPECIFICATIONS SECTION 902-5. IF EXPOSING THE PRIMED BASE COURSE TO GENERAL TRAFFIC, APPLY A COVER MATERIAL THAT HAS BEEN COATED WITH 2 TO 4% ASPHALT CEMENT. APPLY THE ASPHALT COATED MATERIAL AT APPROXIMATELY 10 LB /SQ.YD [5.5 KG/SQ. M]. ROLL THE ENTIRE SURFACE OF ASPHALT COATED MATERIAL WITH A TRAFFIC ROLLER AS REQUIRED TO PRODUCE A REASONABLE DENSE MAT.

8.4 TACK COAT: UNLESS THE CONTRACT DOCUMENTS CALL FOR A SPECIFIC TYPE OR GRADE OF TACK COAT, USE UNDILUTED EMULSIFIED ASPHALT GRADES RS-1 OR RS-2 MEETING THE REQUIREMENTS OF FDOT STANDARD SPECIFICATIONS SECTION 916-4. HEAT RS-1 OR RS-2 TO A TEMPERATURE OF 140 TO 180° F [60 TO 82°C].

8.5 APPLICATION OF PRIME COAT

8.5.1 GENERAL: CONTRACTOR SHALL CLEAN THE SURFACE TO BE PRIMED AND ENSURE THAT THE MOISTURE CONTENT OF THE BASE DOES NOT EXCEED 90% OF THE OPTIMUM MOISTURE. ENSURE THAT THE TEMPERATURE OF THE PRIME MATERIAL IS BETWEEN 100 AND 150° F [40 AND 65° C]. APPLY THE MATERIAL WITH A PRESSURE DISTRIBUTOR. DETERMINE THE APPLICATION AMOUNT BASED ON THE CHARACTER OF THE SURFACE. USE AN AMOUNT SUFFICIENT TO COAT THE SURFACE THOROUGHLY AND UNIFORMLY WITH NO EXCESS.

8.5.2 RATE OF APPLICATION: CONTRACTOR SHALL USE A RATE OF APPLICATION THAT IS NOT LESS THAN 0.1 GAL/SQ.YD [0.5 L/SQ.M], UNLESS A LOWER RATE IS DIRECTED BY THE E.O.R.

8.6 APPLICATION OF PRIME COAT

8.6.1 WHERE REQUIRED: IN GENERAL THE E.O.R. WILL NOT REQUIRE A TACK COAT ON PRIMED BASES EXCEPT IN AREAS THAT HAVE BECOME EXCESSIVELY DIRTY AND CANNOT BE CLEANED, OR IN AREAS WHERE THE PRIME HAS CURED TO AN EXTENT THAT IT HAS LOST ALL BONDING EFFECT. GENERALLY, THE E.O.R. WILL REQUIRE A TACK COAT ON HOT BITUMINOUS BASE COURSE BEFORE PLACING THE SURFACE COURSE.

8.6.2 METHOD OF APPLICATION: CONTRACTOR SHALL APPLY THE TACK COAT WITH A PRESSURE DISTRIBUTOR EXCEPT THAT ON SMALL JOBS, IF APPROVED BY THE E.O.R., IT MAY BE APPPLIED BY OTHER MECHANICAL DEVICES OR BY HAND METHODS. HEAT THE BITUMINOIS MATERIAL TO A SUITABLE TEMPERATURE AS DESIGNATED BY THE E.O.R., AND APPLY IT IN A THIN, UNIFORM LAYER.

8.6.3 RATE OF APPLICATION: CONTRACTOR SHALL USE A RATE OF APPLICATION BETWEEN 0.02 AND 0.08 GAL/SQ.YD [0.09 AND 0.36 L/SQ.M].

9. BITUMINOUS SURFACE TREATMENT (INCLUDING MINERAL SEAL COAT)

9.1 DESCRIPTION: CONTRACTOR SHALL CONSTRUCT A WEARING SURFACE OF SEPARATE APPLICATIONS OF BITUMINOUS MATERIAL COVEREED WITH AGGREGATE, EITHER IN SINGLE APPLICATIONS, DOUBLE (ALTERNATE) APPLICATIONS OR TRIPLE (ALTERNATE) APPLICATIONS

9.2 COMPOSITION AND PROPORTIONING: THE COMPOSITION AND PROPORTIONING FOR THE VARIOUS TYPES OF BITUMINOUS SURFACE TREATMENT AND FOR MINERAL SEAL COAT SHALL BE AS PER THE TABLES IN FDOT STANDARD SPECIFICATIONS SECTION 310-2.

.

9.3 EQUIPMENT:

9.3.1 PRESSURE DISTRIBUTOR: CONTRACTOR SHALL PROVIDE A PRESSURE DISTRIBUTOR THAT IS EQUIPPED WITH PNEUMATIC TIRES HAVING A SUFFICIENT WIDTH OF RUBBER IN CONTACT WITH THE ROAD SURFACE TO AVOID BREAKING THE BOND OR FORMING A RUT IN THE SURFACE. ENSURE THAT THE DISTANCES BETTWEEN THE CENTRES OF OPENINGS OF THE OUTSIDE NOZZLES OF THE SPRAY BAR IS EQUAL TO THE WIDTH OF THE APPLICATION REQUIRED, WITHIN A ALLOWABLE VARIATION OF 2 INCHES [50 MM]. ENSURE THAT THE OUTSIDE NOZZLE AT EACH END OF THE SPRAY BAR HAS AN AREA OF OPENING NOT LESS THAN 25% OR MORE THAN 75% IN EXCESS OF THE OTHER NOZZLES. ENSURE THAT ALL NOZZLES HAVE UNIFORM OPENINGS.

9.3.2 SPREADING EQUIPMENT: CONTRACTOR SHALL PROVIDE SUFFICIENT TRUCKS AD AGGREGATE SPREADERS AT THE SITE OF THE WORK TO ENSURE CONTINUOUS SPREADING OF THE AGGREGATE ON THE UNCOVERED BITUMINOUS MATERIAL. USE A SPREADER OF THE MECHANICAL TYPE THAT IS SELF-SUPPORTED (TOWED) OR SELF-PROPELLED THAT IS CAPABLE OF PRODUCING A SMOOTH, UNIFORM DISTRIBUTION OF THE COVER MATERIAL. DO NOT USE SPREADERS OF THE TYPE ATTACHED DIRECTLY TO THE BACK OF THE TRUCK BODY (TAIL GATE SPREADERS).

9.3.3 ROLLERS: CONTRACTOR SHALL PROVIDE ROLLERS THAT ARE 3 TO 5 TON [2.7 TO 4.5 METRIC TON] STEEL-TIRED OR COMBINATION STEEL AND RUBBER-TIRED, ROLLERS AND SELF-PROPELLED, PNEUMATIC-TIRED TRAFFIC TYPE ROLLERS THAT ARE EQUIPPED WITH AT LEAST SEVEN SMOOTH-TREAD, LOW-PRESSURE TIRES AND CAPABLE OF CARRYING A LOAD OF AT LEAST 8 TONS [7 METRIC TONS]. MAINTAIN THE INFLATION IN THE TIRES SUCH THAT IN NO TWO TIRES THE AIR PRESSURE VARIES MORE THAN 5 PSI [35 KPA]. LOAD THE TRAFFIC LOADER AS DIRECTED BY THE E.O.R.

9.4 APPLICATION OF BITUMINOUS MATERIAL:

9.4.1 DISTRIBUTOR PRESSURE: AFTER CLEANING THE SURFACE TO BE TREATED TO THE SATISFACTION OF THE E.O.R. ,THE CONTRACTOR SHALL UNIFORMLY SPRAY THE BITUMINOUS MATERIAL OVER THE SURFACE BY MEANS OF A PRESSURE DISTRIBUTOR. WHEN A SURFACE CONSTRUCTED UNDER THIS SECTION IS ON A PAVED SHOULDER, USE A STRINGLINE OR OTHER APPROVED METHOD TO PRODUCE A UNIFORM LINE ALONG THE EDGE OF THE APPLIED BITUMINOUS MATERIAL ADJACENT TO THE TRAFFIC LANES. USE A DISTRIBUTOR THAT MAINTAINS A PRESSURE OF AT LEAST 20 PSI [140 KPA] AND 75 PSI [520 KPA].

9.4.2 APPLICATION TEMPERATURES: FOR ASPHALT CEMENT, MAINTAIN AN APPLICATION TEMPERATURE BETWEEN 300 AND 350° F [150 AND 175° C]. FOR EMULSIFIED ASPHALT MAINTAIN AN APPLICATION TEMPERATURE BETWEEN 100 AND 170° F [38 AND 75° C]. FOR CUT-BACK ASPHALT, MAINTAIN AN APPLICATION TEMPERATURE BETWEEN 175 AND 275° F [80 AND 135° C].

9.4.3 UNIFORMITY OF DISTRIBUTION: CONTRACTOR SHALL TAKE SPECIAL PRECAUTIONS TO OBTAIN AN EVEN AND UNIFORM DISTRIBUTIOIN OF BITUMINOUS MATERIAL, AND ADJUST AND OPERATE THE DISTRIBUTOR SO AS TO MAINTAIN UNIFORM, EVEN DISTRIBUTION OF THE MATERIAL BEING APPLIED. IMMEDIATELY REMOVE EXCESSIVE DEPOSITS OF BITUMINOUS MATERIAL UPON THE ROAD SURFACE CAUSED BY STOPPING AND STARTING THE DISTRIBUTOR, BY LEAKAGE OR OTHERWISE.

9.5 SPREADING COVER MATERIAL

9.5.1 SPREADING: SPREAD THE COVER MATERIAL IMMEDIATELY FOLLOWING EACH APPLICATION OF BITUMINOUS MATERIAL. UNIFORMLY DISTRIBUTE THE COVER MATERIAL OVER THE BITUMINOUS SURFACE IN ONE, TWO, OR THREE COURSES AS SPECIFIED. PERFORM SPREADING USING APPROVED MECHANICAL SPREADERS. USING ONLY DIRVERS EXPERIENCED IN THIS TYPE OF WORK FOR DRIVING THE SPREADERS. DO NOT DRIVE TRUCKS OR SPREADERS ON THE UNCOVERED BITUMINOUS MATERIAL.

9.5.2 BROOMING AND DRESSING: IMMEDIATELY AFTER EACH APPLICATION OF COVER MATERIAL, BROOM THE SURFACE IN ORDER TO SECURE A UNIFORM DISTRIBUTION OF COVER MATERIAL AND A SMOOTH SURFACE. PLACE ADDITIONAL AGGREGATE BY HAND ON ANY AREAS NOT PROPERLY COVERED.

9.6 ROLLING AND CURING

9.6.1 GENERAL REQUIREMENTS: IMMEDIATELY AFTER THE SPREADING AND DRAGGING OF EACH APPLICATION OF COVER MATERIAL, ROLL THE ENTIRE SURFACE. BEGIN ROILLING WITHIN 30 MINUTES AFTER SPREADING OF THE COVER MATERIAL. BEGIN ROLLING AT THE EDGES AND PROGRESS TO THE CENTRE OF THE SURFACE, UNIFORMLY LAPPING EACH PRECEDING PASS AND THOROUGHLY COVERING THE ENTIRE SURFACE. DURING ROLLING, PERFORM ADDITIONAL DRAGGING AND HANDBROOMING AS SPECIFIED ABOVE. FIRST ROLL THE ENTIRE SURFACE WITH A TRAFFIC ROLLER, FOLLOWED IMMEDIATELY WITH A STEEL-WHEELED ROLLER. COVER THE ENTIRE SURFACE WITH A STEEL-WHEELED ROLLER. THEN, ROLL THE COVER MATERIAL AGAIN WITH THE TRAFFIC ROLLER. CONTINUE THE ROLLING AS LONG AS IS NECESSARY TO ENSURE THE THOROUGH KEYING OF THE COVER MATERIAL AND TO SECURE A UNIFORMLY CLOSED SURFACE.

9.6.2 SHOULDER PAVEMENT: FOR BITUMINOUS SURFACE-TREATED SHOULDER PAVEMENT, THE E.O.R. MAY REQUIRE ADDITIONAL ROLLING AS HE DEEMS NECESSARY TO COMPENSATE FOR THE LACK OF SUBSEQUENT ROLLING BY HIGHWAY TRAFFIC.

9.7 SURFACE REQUIREMENTS: CONTRACTOR SHALL PROVIDE A FINISHED SURFACE THAT IS UNIFORM AND CONFORMS TO THE LINES, GRADES AND CROSS SECTIONS SHOWN IN THE PLANS. REMOVE ALL PORTIONS OF THE COMPLETED SURFACE THAT ARE DEFECTIVE, ARE NOT PROPERLY FINISHED, HAVE FAT JOINTS, OR ARE NOT IN REASONABLY CLOSE CONFORMANCE WITH THESE SPECIFICATIONS, AND REPLACE THEM WITH A SATISFACTORY SURFACE.

9.8 PROTECTION: AFTER APPLYING THE BITUMINOUS MATERIAL, THE CONTRACTOR SHALL PREVENT TRAFFIC FROM USING THE ROAD UNTIL PLACING AND THOROUGHLY ROLLING THE COVER MATERIAL. IF POSSIBLE COMPLETE THE TRAFFIC OFF THE FINISHED SURFACE FOR AT LEAST 48 HOURS AFTER COMPLETING FINISHING

10. HOT BITUMINOUS MIXTURES

10.1 TRANSPORTATION OF THE MIXTURE: TRANSPORT THE MIXTURE IN TIGHT VEHICLES PREVIOUSLY CLEANED OF ALL FOREIGN MATERIAL. AFTER CLEANING, THINLY COAT THE INSIDE OF THE TRUCK BODIES WITH SOAPY WATER OR AN APPROVED EMULSION CONTAINING NOT MORE THAN 5% OIL. APPLY THE COATING PRIOR TO THE FIRST LOADING EACH DAY AND REPEAT AS NECESSARY THROUGHOUT THE DAY'S OPERATIONS. AFTER THE TRUCK BODIES ARE COATED AND BEFORE ANY MIXTURE IS PLACED THEREIN, RAISE THEM TO DRAIN OUT ANY EXCESS LIQUIDS. COVER EACH LOAD DURING COOL AND CLOUDY WEATHER AND AT ANY TIME THERE IS A PROBABILITY OF RAIN.

10.2 PREPARATION OF APPLICATION SURFACES

10.2.1 CLEANING: PRIOR TO THE LAYING OF THE MIXTURE, CLEAN THE SURFACE OF THE BASE OR THE PAVEMENT TO BE COVERED OF ALL LOOSE OR DELETERIOUS MATERIAL BY THE USE OF POWER BROOMS OR BLOWERS, SUPPPLEMENTED BY HAND BROOMING WHERE NECESSARY.

10.2.2 PATCHING AND LEVELING COURSES: WHEN AN ASPHALT MIX IS TO BE PLACED ON AN EXISTING PAVEMENT OR OLD BASE WHICH IS IRREGULAR, AND WHEREVER THE PLANS INDICATE, BRING THE EXISTING SURFACE TO PROPER GRADE AND CROSS SECTION BY THE APPLICATION OF PATCHING AND LEVELING COURSES.

10.2.3 APPLICATION OVER SURFACE TREATMENT: WHERE AN ASPHALT MIX IS TO BE PLACED OVER NEWLY CONSTRUCTED SURFACE TREATMENT, SWEEP AND DISPOSE OF ALL LOOSE MATERIAL FROM THE PAVING AREA.

10.2.4 COATING SURFACES OF CONTACTING STRUCTURES: PAINT ALL STRUCTURES WHICH WILL BE IN ACTUAL CONTACT WITH THE ASPHALT MIXTURE, WITH THE EXCEPTION OF THE VERTICAL FACES OF THE EXISTING PAVEMENTS AND CURBS OR CURB AND GUTTER, WITH A UNIFORM COATING OF ASPHALT CEMENT TO PROVIDE A CLOSELY BONDED, WATER-TIGHT JOINT.

10.3 PLACING MIXTURE

10.3.1 ALIGNMENT OF EDGES: LAY ALL ASPHALTIC CONCRETE MIXTURES, INCLUDING LEVELING COURSES OTHER THAN ADJACENT TO CURB AND GUTTER AND OTHER TRUE EDGES, BY THE STRINGLINE METHOD TO OBTAIN AN ACCURATE, UNIFORM ALIGNMENT OF THE PAVEMENT EDGE.

10.3.2 TEMPERATURE OF SPREADING: THE CONTRACTOR SHALL MAINTAIN THE TEMPERATURE OF THE MIX AT THE TIME OF SPREADING TO WITHIN +/- 24° F [+/- 14° C] OF THE ESTABLISHED MIX TEMPERATURE ESTABLISHED BY THE CONTRACTOR. AS A MINIMUM, THE ENGINEER WILL TAKE MIX TEMPERATURES OF THE MIX ON THE ROAD IN AN AVERAGE FREQUENCY OF ONE PER FIVE TRUCKS. IF THE TEMPERATURE FAILS TO FALL WITHIN SPECIFIED TOLERANCE CORRECTIVE ACTION MAY NEED TO BE TAKEN.

10.3.3 RAIN AND SURFACE CONDITIONS: IMMEDIATELY CEASE TRANSPORTATION OF ASPHALT MIXTURES FROM THE PLANT WHEN RAIN BEGINS AT THE ROADWAY. DO NOT PLACE ASPHALT MIXES WHILE RAIN IS FALLING, OR WHEN THERE IS WATER ON THE SURFACE TO BE COVERED. AS AN EXCEPTION, THE CONTRACTOR MAY PLACE MIXTURES CAUGHT IN TRANSIT AT THE CONTRACTOR'S RISK IF THE ONLY OPTION IS TO WASTE THE MIXTURE AND PROVIDED THE SURFACE HAS BEEN TACKED AS REQUIRED PRIOR TO THE RAIN AND THE SURFACE IS BROOMED IN FRONT OF THE SPREADING OPERATION.

10.4 COMPACTING MIXTURE

10.4.1 STANDARD ROLLING PROCEDURE: CONTRACTOR SHALL MEET THE FOLLOWING EQUIPMENT, SEQUENCE , AND COVERAGE REQUIREMENTS:

1. SEAL ROLLING: PROVIDE TWO COVERAGES WITH A TANDEM STEEL-WHEELED ROLLER (EITHER VIBRATORY OR STATIC), WEIGHING 5 TO 12 TONS [4.5 TO 11 METRIC TONS], FLOOLWING AS CLOSE BEHIND THE SPREADER AS POSSIBLEWITHOUT PICK-UP, UNDUE DISPLACEMENT OR BLISTERING OF THE MATERIAL. USE VIBRATORY ROLLERS IN THE STATIC MODE FOR LAYERS OF 1 INCH [25MM] OR LESS IN THICKNESS.
2. INTERMEDIATE ROLLING: PROVIDE FIVE COVERAGES WITH A SEFL-PROPELLED PNEUMATIC-TIRED ROLLER, FOLLOWING AS CLOSE BEHIND THE SEAL ROLLNG OPERATION AS THE MIX WILL PERMIT.
3. FINAL ROLLING: PROVIDE ONE COVERAGE WITH A TANDUM STEEL-WHEELED ROLLER (STATIC MODE ONLY), WEIGHING 5 TO 12 TONS [4.5 TO 11 METRIC TONS], AFTER COMPLETING THE SEAL ROLLING AND INTERMEDIATE ROLLING, BUT BEFORE THE SURFACE PAVEMENT TEMPERATURE DROPS BELOW 160° F [70°C].

10.4.2 ROLLING PROCEDURES: ENSURE THAT THE INITIAL ROLLLING IS LONGITUDINAL. WHERE THE LANE BEING PLACED IS ADJACENT TO A PREVIOUSLY PLACED LANE, PINCH OR ROLL THE CENTRE JOINT PRIOR TO ROLLING THE REST OF THE LANE. ROLL ACROSS THE MAT, OVERLAPPING THE ADJACENT PASS BY AT LEAST 6 INCHES [150 MM]. ROLL SLOWLY ENOUGH TO AVOID DISPLACEMENT OF THE MIXTURE AND CORRECT ANY DISPLACEMENT AT ONCE BY THE USE OF RAKES AND THE ADDITION OF FRESH MIXTURE AS REQUIRED.

10.4.3 SPEED OF ROLLING: OPERATE THE SELF-PROPELLED, PNEUMATIC-TIRED ROLLER AT THE SPEED OF 6 TO 10 MPH [10 TO 16 KM/H]. FOR EACH ROLLER DO NOT EXCEED AN AREA OF COVERAGE OF 3,000 SQ.YD/H [2,500 SQ.M/H].

10.4.4 CORRECTING DEFECTS: CONTRACTOR SHALL NOT ALLOW ROLLERS TO DEPOSIT GASOLINE, OIL, OR GREASE ONTO THE PAVEMENT. REMOVE OR REPLACE ANY AREAS DAMAGED BY SUCH DEPOSITS AS DIRECTED BY THE E.O.R.REMOVE AND REPLACE ANY MIXTURE REMAINING UNBONDED AFTER ROLLING. CORRECT ALL DEFECTS PRIOR TO LAYING THE SUBSEQUENT COURSE.

11. TYPE S ASPHALT CONCRETE

11.1 DESCRIPTION: THE COMPOSITION AND PHYSICAL TEST PROPERTIES FOR ALL MIXES INCLUDING TYPE S ASPHALTIC CONCRETE (SI, SII AND SIII) ARE SHOWN IN FDOT STANDARD SPECIFICATIONS, TABLES 331-1 AND 331-2.

12. INLETS, MANHOLES, AND JUNCTION BOXES

12.1 DESCRIPTION: CONTRACTOR SHALL CONSTRUCT DROP INLETS, MANHOLES, JUNCTION BOXES, SHOULDER GUTTER INLETS, AND YARD DRAINS FROM REINFORCED CONCRETE. FURNISH AND INSTALL THE NECESSARY METAL FRAMES AND GRATINGS. ALSO, ADJUST THOSE STRUCTURES SHOWN IN THE PLANS TO BE ADJUSTED OR WHICH ARE REQUIRED TO BE ADJUSTED FOR THE SATISFACTORY COMPLETION OF THE WORK.

12.2 EXCAVATION: WHERE UNSUITABLE MATERIALS FOR FOUNDATIONS IS ENCOUNTERED, EXCAVATE THE UNSUITABLE MATERIAL AND BACKFILL WITH SUITABLE MATERIAL PRIOR TO CONSTRUCTING OR SETTING INLETS, MANHOLES AND JUNCTION BOXES.

12.3 PLACING PIPE: CONTRACTOR SHALL CONSTRUCT INLET AND OUTLET PIPES FROM THE SAME SIZE AND KIND AS THE CONNECTING PIPE SHOWN IN THE PLANS. EXTEND THE PIPES THROUGH THE WALLS FOR A DISTANCE BEYOND THE OUTSIDE SURFACE SUFFICIENT FOR THE INTENDED CONNECTIONS, AND CONSTRUCT THE CONCRETE AROUND THEM NEATLY TO PREVENT LEAKAGE AROUND THEIR OUTER SURFACE. KEEP THE INLET AND OUTLET PIPES FLUSH WITH THE INSIDE OF THE WALL. RESILIENT CONNECTORS MAY BE USED IN LIEU OF A MASONRY SEAL.

12.4 BACKFILLING: BACKFILLING OPERATIONS SHALL BE PERFORMED IN CONFORMANCE WITH FDOT STANDARD SPECIFICATIONS SECTION 125, MEETING THE SPECIFIC REQUIREMENTS OF BACKFILLING AND COMPACTION AROUND INLETS, MANHOLES AND JUNCTION BOXES DETAILED IN 125-8.1 AND 125-8.2.

DIVISION III- SUPPLEMENTAL NOTES

1. GENERAL NOTES

1.1 ACCOMMODATION: THE CONTRACTOR SHALL PROVIDE AND MAINTAIN ALL NECESSARY SHEDS AND STORES AND REMOVE THE SAME FROM SITE ON COMPLETION OF WORKS. NO STRUCTURE SHALL BE ERECTED ON SITE WITHOUT THE OWNER'S WRITTEN CONSENT. SUCH CONSENT WILL NOT RELIEVE THE CONTRACTOR OF THE RESPONSIBILITY OF CITING TEMPORARY STRUCTURES CLEAR OF THE WORKS.

1.2 STANDARDS: ALL WORK SHALL BE CARRIED OUT IN CONFORMITY WITH SOUND MODERN ROAD MAKING PRACTICES IN WHICH THE CONTRACTOR OR ANY SUB-CONTRACTOR MUST HAVE CONSIDERABLE KNOWLEDGE AND EXPERIENCE. THE CONTRACTOR SHALL CARRY OUT THE WORK IN A DILIGENT AND ORDERLY MANNER. SUFFICIENT EQUIPMENT AND QUALIFIED PERSONNEL SHALL BE AVAILABLE TO ACCOMPLISH THE WORK AT ALL TIMES. A SUITABLE QUALIFIED PERSON SHALL BE CONTINUOUSLY IN CHARGE OF THE WORK.

1.3 SUPPLY OF WATER: THE CONTRACTOR SHALL ARRANGE FOR AN ADEQUATE SUPPLY OF FRESH WATER AT THE SITE, INCLUDING PROVISION OF ANY STORAGE TANKS, SO THAT SUFFICIENT FRESH WATER IS AVAILABLE FOR THE EXECUTION OF THE WORKS.

1.4 PROTECTION OF WORKS FROM WEATHER: THE CONTRACTOR SHALL CAREFULLY PROTECT FROM INJURY BY RAIN, HEAT OR INCLEMENT WEATHER ALL WORKS, WHICH MAY BE ADVERSELY AFFECTED THEREBY.

1.5 CLEANLINESS OF SITE: THE CONTRACTOR SHALL REMOVE ALL RUBBISH, DEBRIS, ETC. AS THEY ACCUMULATE ON THE SITE, AND CLEAN THE AREAS AS NECESSARY SO THAT THE SITE IS KEPT CLEAN AND TIDY DURING THE PROGRESS OF THE CONTRACT. THE CONTRACTOR SHALL ALSO BE RESPONSIBLE FOR ENSURING THAT NO EARTH, DEBRIS OR ROCK IS DEPOSITED ON

PUBLIC OR PRIVATE RIGHTS OF WAY AS RESULT OF THE WORKS, INCLUDING ANY DEPOSITS ARISING FROM THE MOVEMENT OF PLANT. THE CONTRACTOR SHALL PROVIDE ALL FACILITIES AND LABOUR ARISING FROM COMPLIANCE WITH THIS CLAUSE. **1.6 REGULATIONS:** THE CONTRACTOR SHALL:

1.6.1 ABIDE BY THE LAWS AND REGULATIONS OF THE UNITED STATES VIRGIN ISLANDS (USVI), PARTICULARLY WITH REGARD TO FIRE REGULATIONS AND SAFETY.

1.6.2 OBTAIN ALL NECESSARY PERMITS TO CUT DOWN TREES, BURN WASTE AND DEBRIS, AND ABIDE BY STIPULATION OF PERMITS.

2. EARTH WORKS

2.1 DEFINITIONS AND CLASSIFICATIONS: THE FOLLOWING DEFINITIONS OF EARTH WORKS MATERIAL SHALL APPLY TO THIS AND OTHER CLAUSES OF THE SPECIFICATION IN WHICH REFERENCE IS MADE TO THE DEFINED MATERIALS:

A) 'TOP SOIL' SHALL COMPRISE ALL THAT CAN SUPPORT VEGETATION.

B) 'SUITABLE MATERIAL' SHALL COMPRISE ALL THAT WHICH IS ACCEPTABLE IN ACCORDANCE WITH THE CONTRACT FOR USE IN THE WORKS AND WHICH IS CAPABLE OF BEING COMPACTED IN THE MANNER SPECIFIED IN THESE SPECIFICATIONS.

C) 'UNSUITABLE MATERIAL' SHALL MEAN OTHER THAN SUITABLE MATERIAL AND SHALL INCLUDE:

(I) MATERIAL FROM SWAMPS.
(II) LOGS, STUMPS AND PERISHABLE MATERIAL.
(III) MATERIALS SUSCEPTIBLE TO SPONTANEOUS COMBUSTION.

CLAY OF LIQUID LIMIT EXCEEDING 80 % AND/OR PLASTICITY INDEX EXCEEDING 55 %.

(D)'ROCK' SHALL MEAN A HARD NATURAL MATERIAL THAT NEEDS THE USE OF BLASTING OR PNEUMATIC TOOLS OR RIPPING FOR REMOVAL.

(E)'CUT' IS DEFINED AS THE MATERIAL REQUIRED TO BE REMOVED TO ACHIEVE TO THE DESIGN ELEVATION (SUB-BASE GRADE).

(F)'FILL' IS DEFINED AS THE MATERIAL REQUIRED TO BE PLACED IN ORDER TO ACHIEVE THE DESIGN ELEVATION.

2.2 EXCAVATION

2.2.1 THE EXCAVATION SHOWN ON THE DRAWINGS OR SPECIFIED BY THE OWNER'S REPRESENTATIVE SHALL BE CARRIED OUT TO SUCH LINES, LEVELS, DIMENSIONS AND SLOPES. EXCAVATION FACES SHALL BE NEATLY TRIMMED.

2.2.2 A TOLERANCE OF ONE INCH OVER OR UNDER THE DESIGN PROFILES MAY BE PERMITTED UNLESS OTHERWISE REQUIRED BY THE CONTRACT.

2.2.3 ANY EXCESS DEPTH EXCAVATED BELOW THE FORMATION PROFILE TOLERANCE SPECIFIED SHALL BE MADE GOOD BY BACK FILLING WITH SUITABLE MATERIAL OF SIMILAR CHARACTERISTICS TO THAT REMOVED, AND COMPACTED IN ACCORDANCE WITH THESE SPECFICATIONS.

2.2.4 THE SLOPES OF ALL CUTTINGS SHALL BE CLEARED OF ALL ROCK FRAGMENTS, WHICH MOVE WHEN PRIED BY A CROW BAR.

2.2.5 CONSTRUCTION TRAFFIC SHALL NOT USE ANY ROAD FORMATION AT THE BOTTOM OF A CUTTING UNLESS THE CUTTING IS IN ROCK OR THE CONTRACTOR MAINTAINS THE LEVEL OF THE BOTTOM SURFACE AT LEAST 1 FOOT ABOVE FORMATION LEVEL.

THE CONTRACTOR AT HIS OWN EXPENSE SHALL REPAIR ANY DAMAGE TO THE SUB-GRADE ARISING FROM SUCH USE OF THE SURFACE.

2.3 PREPARATION OF FILL AREAS: UNLESS OTHERWISE REQUIRED BY THE CONTRACT THE NATURAL GROUND OVER WHICH FILLING IS TO BE PLACE SHALL BE CLEARED OF ALL LOOSE BOULDERS, GRASS, PRODUCTIVE SOIL, BUSHES, TREES, ROOTS AND OTHER VEGETATION. NO FILLING MATERIAL SHALL BE PLACED UNTIL ALL WATERCOURSES HAVE BEEN DIVERTED OR UNDER DRAINED. ALL POTHOLES OR CAVITIES DISCOVERED SHALL BE OPENED UP, FILLED AND COMPACTED BEFORE ANY FILLING TAKES PLACE.

2.4 FORMING OF EMBANKMENTS: ALL FILLING MATERIAL SHALL BE OBTAINED FROM APPROVED BORROW AREAS OR FROM OTHER SOURCES APPROVED BY THE PROJECT ENGINEER.

2.4.1 EMBANKMENTS SHALL BE FORMED OF MATERIAL DEFINED AS SUITABLE MATERIAL IN CLAUSE 4.1 THE MATERIAL SHALL BE DEPOSITED AND COMPACTED AS SOON AS PRACTICABLE AFTER EXCAVATION IN ACCORDANCE WITH CLAUSE 4.7. EMBANKMENTS SHALL BE BUILT UP EVENLY OVER THE FULL WIDTH AND SHALL BE MAINTAINED AT ALL TIMES WITH A SURFACE OF SUFFICIENT CAMBER AND SUFFICIENTLY EVEN TO ENABLE SURFACE WATER TO DRAIN READILY FROM THEM. DAMAGE TO COMPACTED LAYERS BY CONSTRUCTION TRAFFIC SHALL BE REPAIRED BY THE CONTRACTOR.

2.4.2 THE EXISTING GROUND BELOW EMBANKMENT AREAS SHALL BE CLEARED AS SPECIFIED IN 2.4, AND THEN RIPPED TO A DEPTH OF TWELVE INCHES (12") BELOW EXISTING GROUND LEVEL. THE RIPPED ROCK SHALL THEN BE WELL WALKED IN UNTIL IT WILL PASS A 4" GAUGE AND THOROUGHLY COMPACTED IN ACCORDANCE WITH TABLE 2.1.

2.4.3 ROCK USED, AS FILL SHALL BE OF SUCH SIZE THAT IT CAN BE DEPOSITED IN HORIZONTAL LAYERS, EACH NOT EXCEEDING 18 INCHES LOOSE DEPTH AND EXTENDING OVER THE FULL WIDTH OF THE EMBANKMENTS. MATERIALS SHALL BE SPREAD AND LAID BY A CRAWLER TRACTOR WEIGHING NOT LESS THAN 15 TONS AND COMPACTED IN ACCORDANCE WITH CLAUSE 3.2. EACH LAYER SHALL CONSIST OF REASONABLY GRADED ROCK AND ALL SURFACE VOIDS SHALL BE FILLED WITH BROKEN FRAGMENTS BEFORE THE NEXT LAYER IS PLACED. THE TOP SURFACE AND SIDE SLOPES OF EMBANKMENTS SO FORMED SHALL BE THOROUGHLY BLINDED WITH APPROVED FINE GRADED MATERIALS TO SEAL THE SURFACE.

2.4.4 IF THE CONTRACTOR WISHES TO CONTINUE TO USE THE SURFACE OF EMBANKMENTS FOR CONSTRUCTION TRAFFIC BEFORE TRIMMING TO FORMATION LEVEL HE SHALL BRING UP AND MAINTAIN THE SURFACE TO A LEVEL NOT LESS THAN 6 INCHES ABOVE FORMATION LEVEL. ANY DAMAGE TO THE SUBGRADE CAUSE BY THE USE OF SUCH SURFACE SHALL BE MADE GOOD BY THE CONTRACTOR AT HIS OWN EXPENSE.

2.5 COMPACTION

ALL MATERIAL SHALL BE COMPACTED AS SOON AS PRACTICABLE AFTER DEPOSITION. THE PERCENTAGE COMPACTION SHALL EQUAL OR EXCEED 95% OF THE MODIFIED PROCTOR MAXIMUM DRY DENSITY.

AS A GUIDELINE TABLE 2.1 GIVES COMPACTION REQUIREMENTS FOR TYPES OF EQUIPMENT, DEPTH OF LAYER AND NUMBER OF PASSES. LISTED BELOW ARE THE DEFINITIONS AND CLASSIFICATIONS ASSOCIATED WITH TABLE 2.1

TABLE 2.1 COMPACTION REQUIREMENTS
D= MAXIMUM DEPTH OF COMPACTED LAYER (INCHES)
N= MINIMUM NUMBER OF PASSES

TYPE OF COMPACTION PLANT	CATEGORY	UNIFORMLY GRADED MATERIAL	
MASS PER YD WIDTH OF ROLL:		D	N
SMOOTH-WHEELED ROLLER	OVER 0.71T UP TO 0.91T	5	10*
	OVER 0.91T UP TO 1.80T	5	8*
	OVER 1.81T	UNSUITABLE	
GRID ROLLER	OVER 0.91T UP TO 1.81T	6	10*
	OVER 1.81T UP TO 1.82T	UNSUITABLE	
	OVER 1.82T	UNSUITABLE	
TAMPING ROLLER	OVER 4.41T	10	4
VIBRATING ROLLER	MASS PER YARD WIDTH OF A VIBRATING ROLL:		
	OVER 0.09T UP TO 0.15T	6	16
	OVER 0.15T UP TO 0.24T	6	12
	OVER 0.24T UP TO 0.44T	6	6
	OVER 0.44T UP TO 0.60T	8	10*
	OVER 0.60T UP TO 0.77T	9	12*
	OVER 0.77T UP TO 0.97T	10	10*
	OVER 0.97T UP TO 1.21T	11	8*
	OVER 1.21T UP TO 1.44T	12	8*
	OVER 1.44T UP TO 1.68T	12	6*
	OVER 1.68T	12	4*

2.6 NOTES TO TABLE 2.1

A) THE DEPTH OF COMPACTED LAYER IS THE HEIGHT BY WHICH THE EMBANKMENT IS RAISED BY EACH SUCCESSIVE COMPACTED LAYER.

B) THE NUMBER OF PASSES IS THE NUMBER OF TIMES THAT EACH POINT ON THE SURFACE OF THE LAYER BEING COMPACTED HAS BEEN TRAVERSED BY THE ITEM OF COMPACTION PLANT.

C) THE COMPACTIVE EFFORT OF EACH COMPACTOR IS A FUNCTION OF THE MASS OF THE MACHINE AND THE COMPACTION PLANT IN TABLE 2.1 IS LISTED IN TERMS OF THEIR MASSES. THE MASS PER YARD WIDTH OF ROLL IS THE TOTAL MASS ON THE ROLL DIVIDED BY THE TOTAL ROLL WIDTH. WHERE A SMOOTH-WHEELED ROLLER HAS MORE THAN ONE AXLE. THE MACHINE SHALL BE ASSESSED ON THE BASIS OF THE AXLE GIVING THE HIGHEST VALUE OF MASS PER YARD WIDTH.

D) A TAMPING ROLLER, FOR THE PURPOSE OF THIS SPECIFICATION, IS A MACHINE WITH A ROLL OR ROLLS FROM WHICH 'FEET' PROJECT. THE PROJECTED END AREA OF EACH FOOT SHALL EXCEED 0.11SQ.FT AND THE SUM OF THE AREAS OF FEET SHALL EXCEED 15 PER CENT OF THE AREA OF THE CYLINDER SWEPT BY ENDS OF THE FEET. THE REQUIREMENTS FOR TAMPING ROLLERS APPLY TO MACHINES THAT HAVE 2 ROLLS IN TANDEM. IF ONLY ONE TAMPING ROLL TRAVERSES EACH POINT ON THE SURFACE OF THE LAYER ON ANY ONE PASS OF THE MACHINE, THE MINIMUM NUMBER OF PASSES SHALL BE TWICE THE NUMBER GIVEN IN TABLE 2.1

E) FOR PNEUMATIC-TYRED ROLLERS MASS PER WHEEL IS THE TOTAL MASS OF THE ROLLER DIVIDED BY THE NUMBER OF WHEELS.

F) IN ASSESSING THE NUMBER OF PASSES OF PNEUMATIC-TYRED ROLLER THE EFFECTIVE WIDTH SHALL BE THE SUM OF THE WIDTHS OF THE INDIVIDUAL WHEEL TRACKS TOGETHER WITH THE SUM OF THE SPACING NOT EXCEEDING 10 INCHES. WHERE THE SPACING EXCEEDS 10 INCHES THE EFFECTIVE WIDTH SHALL BE THE SUM OF THE WIDTHS OF THE INDIVIDUAL WHEEL TRACKS ONLY.

G) VIBRATING ROLLERS ARE SELF-PROPELLED OR TOWED SMOOTH WHEELED ROLLERS HAVING MEANS OF APPLYING MECHANICAL VIBRATION TO ONE OR MORE ROLLS.

H) THE REQUIREMENTS FOR VIBRATING ROLLERS ARE BASED ON THE USE OF THE LOWEST GEAR ON A SELF-PROPELLED MACHINE WITH MECHANICAL TRANSMISSION AND A SPEED OF 0.93 -1.55 MPH FOR A TOWED MACHINE, OR A SELF-PROPELLED MACHINE WITH HYDROSTATIC TRANSMISSION. IF HIGHER GEAR SPEEDS ARE USED AN INCREASED NUMBER OF PASSES SHALL BE PROVIDED IN PROPORTION TO THE INCREASE ON SPEED TO TRAVEL.

I) WHERE THE MECHANICAL VIBRATING IS APPLIED TO TWO ROLLS IN TANDEM, THE MINIMUM NUMBER OF PASSES SHALL BE HALF THE NUMBER GIVEN IN TABLE 2.1 FOR THE APPROPRIATE MASS PER YARD WIDTH OF THE ONE VIBRATING ROLL. IF ONE ROLL DIFFERS IN MASS PER YARD WIDTH FROM THE OTHER THE NUMBER OF PASSES SHALL BE CALCULATED AS FOR THE ROLL WITH THE SMALLEST VALUE. ALTERNATIVELY THE MACHINE MAY BE TREATED AS HAVING A SINGLE VIBRATING ROLL MISSING LINE WITH THE HIGHER VALUE.

J) VIBRATING TYPE ROLLERS OPERATING WITHOUT VIBRATION WILL BE CLASSIFIED AS SMOOTH-WHEELED ROLLERS.

K) VIBRATING ROLLERS SHALL BE OPERATED WITH THEIR VIBRATORY MECHANISM OPERATING ONLY AT THE FREQUENCY OF VIBRATION RECOMMENDED BY THE MANUFACTURERS. ALL SUCH ROLLERS SHALL BE EQUIPPED OR PROVIDED WITH A DEVICE AUTOMATICALLY INDICATING THE FREQUENCY AT WHICH THE MECHANISM IS OPERATING.

L) VIBRATING-PLATE COMPACTORS ARE MACHINES HAVING A BASE PLATE TO WHICH IS ATTACHED A SOURCE OF VIBRATION CONSISTING OF ONE OR TWO ECCENTRICALLY WEIGHTED SHAFTS.

M) THE MASS PER UNIT AREA OF BASE-PLATE OF A VIBRATING PLATE COMPACTOR IS CALCULATED BY DIVIDING THE TOTAL MASS OF THE MACHINE IN IT'S WORKING CONDITION BY IT'S AREA IN CONTACT WITH COMPACTED SOIL.

N) VIBRATING-PLATE COMPACTORS SHALL BE OPERATED AT THE FREQUENCY OF VIBRATION RECOMMENDED BY THE MANUFACTURERS. THEY SHALL NORMALLY BE OPERATED AT TRAVELLING SPEEDS OF LESS THAN 0.62MPH BUT IF HIGHER SPEEDS ARE NECESSARY THE NUMBER OF PASSES SHALL BE INCREASED IN PROPORTION TO THE INCREASE IN SPEED OF TRAVEL.

O) VIBRO-TAMPERS ARE MACHINES IN WHICH AN ENGINE-DRIVEN RECIPROCATING MECHANISM ACTS ON A SPRING SYSTEM THROUGH WHICH OSCILLATIONS ARE SET UP IN A BASE-PLATE.

P) POWER RAMMERS ARE MACHINES, WHICH ARE ACTUATED BY EXPLOSIONS IN AN INTERNAL COMBUSTION CYLINDER, EACH EXPLOSION BEING CONTROLLED MANUALLY BY THE OPERATOR.

Q) IN THE CASE OF POWER RAMMERS AND DROPPING WEIGHT COMPACTORS ONE PASS WILL BE CONSIDERED AS MADE WITH THE COMPACTING SHOE HAS MADE ON STRIKE ON THE AREA IN QUESTION.

R) FOR ITEMS MARKED * THE ROLLERS SHALL BE TOWED BY TRACK LAYING TRACTORS. SELF-PROPELLED ROLLERS ARE UNSUITABLE.

S) WHERE COMBINATIONS OF DIFFERENT TYPES OF CATEGORIES OF PLANT ARE USED, THE COMPACTION REQUIREMENTS SHALL BE DECIDED UPON BY THE PROJECT ENGINEER, IN ACCORDANCE WITH TABLE 2.1.

2.7 SUB-GRADE

AT SECTIONS TO BE RECONSTRUCTED OR WHERE CUTTING IS REQUIRED, THE EXISTING FORMATION SHALL BE SCARIFIED TO A DEPTH OF 6" BELOW FORMATION LEVEL.

THE SCARIFIED MATERIAL SHALL THEN BE SHAPED AND ROUGH GRADED, WATERED AND COMPACTED IN ACCORDANCE WITH TAB 6.1 AFTER HARD PLANNING TO ACHIEVE THE REQUIRED CROSS-FALL A FURTHER ROLLING OF ANY LOOSE MATERIAL SHALL BE CARRIED OUT UNTIL A SMOOTH SURFACE LAYER IS ACHIEVED, EXCEPT FOR VERGES. THEY SHALL BE LEFT WITH A ROUGH SURFACE TO RECEIVE THE SUBSEQUENT BASE LAYER.

2.8 BACKFILLING TO RETAINING WALLS

BACKFILL TO RETAINING WALLS SHALL BE PLACED IN LAYERS NOT EXCEEDING NINE INCHES (9") THICK AND THOROUGHLY, BUT NOT EXCESSIVELY, COMPACTED. IF NECESSARY THE MATERIAL SHALL BE WATERED.

2.9 SETTLEMENT

THE CONTRACTOR SHALL BE RESPONSIBLE FOR MAKING GOOD TO THE SATISFACTION OF THE PROJECT ENGINEER ALL SETTLEMENT IN FILLING AND IN BACKFILLING THAT MAY OCCUR UP TO THE END OF THE PERIOD OF MAINTENANCE.

2.10 EARTHWORK TO BE KEPT FREE OF WATER

THE CONTRACTOR SHALL PROVIDE WHERE NECESSARY TEMPORARY WATER COURSE, DITCHES, DRAINS, PUMPING OR OTHER MEANS OF MAINTAINING THE EARTHWORKS FREE OF WATER. SUCH WORK SHALL INCLUDE CARRYING OUT THE WORK OF FORMING THE CUTTINGS AND EMBANKMENTS IN SUCH A MANNER THAT THEIR SURFACES HAVE AT ALL TIMES A SUFFICIENT MINIMUM CROSS FALL AND, WHERE PRACTICABLE, A SUFFICIENT LONGITUDINAL GRADIENT TO ENABLE THEM TO SHED WATER AND PREVENT PONDING.

3 ROAD WORK

3.1 ALL MATERIAL WITHIN THE ROAD ALLOWANCE SHALL BE COMPACTED TO THE SATISFACTION OF THE PROJECT ENGINEER.

3.2 MINIMUM ACCEPTABLE COMPACTION REQUIREMENTS SHALL BE AS FOLLOWS:

3.2.1 ROAD SUB-GRADE 24" BELOW ROAD SUB-BASE OR GREATER: 95% STANDARD PROCTOR DENSITY

3.2.2 ROAD SUB-GRADE LESS THAN 24" BELOW ROAD SUB-BASE: 98% STANDARD PROCTOR DENSITY

3.2.3 ROAD SUB-BASE & BASE: 100% STANDARD PROCTOR DENSITY

A. ASPHALT BASE OR SURFACE COURSE: 97% OF MIX DESIGN DENSITY REGARDLESS OF DEPTH OF ASPHALT BEING PLACED.

3.3. SUB-GRADE PREPARATION: THE ENTIRE ROAD RESERVATION SHALL BE RIPPED ALL OVER TO A DEPTH OF 6" BELOW FORMATION LEVEL; THE RIPPED STONE SHALL THEN BE WELL WALKED IN UNTIL ALL PASS A 4" SCREEN. THE RIPPED STONE SHALL THEN BE ROUGH GRADED, SHAPED, WATERED AND THOROUGHLY COMPACTED TO AT LEAST 95% STANDARD PROCTOR DENSITY. A FURTHER ROLLING OF ANY LOOSE MATERIAL SHALL BE CARRIED OUT UNTIL A SMOOTH SURFACE IS ACHIEVED.

3.4 WHERE UNSTABLE OR ORGANIC SOIL IS FOUND TO EXIST BELOW THE PROPOSED ROAD SUB-BASE, ALL SUCH SOIL AND MATERIAL SHALL BE REMOVED TO A MINIMUM DEPTH OF 4' BELOW FINISH GRADE AND REPLACED WITH APPROVED MATERIAL AS DIRECTED BY THE PROJECT ENGINEER.

3.5 SUB-BASE AND BASE PREPARATION: CLEAN WELL-GRADED STONE FILL PASSING 2" MESH SHALL BE PLACED IN TWO LAYERS OF 4" EACH AND SEPARATELY COMPACTED TO SPECIFIED DENSITY AND PROPER CROSS FALL

3.6 ASPHALT COURSE: FLORIDA TYPE S-I AND S-III SPECIFICATION, AS PER FLORIDA DEPARTMENT OF TRANSPORTATION SPECIFICATION FOR ROAD AND BRIDGE CONSTRUCTION 1982. A 1½" STRUCTURAL COURSE AND A ¾" SURFACE/FRICTION COURSE SHALL BE PLACED AND COMPACTED ACCORDING TO SPECIFIED DENSITY AND PROPER CROSS FALL.

JDG
BOSCHULTE ARCHITECTURE
BUILDTEC

AGENCY:
VIRGIN ISLANDS
DEPARTMENT OF PUBLIC WORKS
6 Susannaberg
Cruz Bay, VI 00830
phone: (340) 776-6346
website: www.dpw.vi.gov

ARCHITECT:
BOSCHULTE ARCHITECTURE, LLC
PO Box 303190
St. Thomas, VI 00803
41-42 Kongens Gade
St. Thomas, VI 00802
phone: (340) 777-2375
e-mail: info@boschulte.com
website: www.boschulte.com

CIVIL ENGINEER:
BUILDTEC, LLC
PO Box 8269
Christiansted, VI 00823
7-1 Bonne Esperance
Christiansted, VI 00820
phone: (340) 513-6918
e-mail: dcartwright@buildteceng.com

DAMIAN CARTWRIGHT
28851-1B

STJ MAINTENANCE BUILDING
FOR
V.I. DEPT. OF PUBLIC WORKS
6 SUSANNABERG
CRUZ BAY, VI 00830

PROGRESS SET

No.	Description	Date
1	100% PERMIT SET	07/14/23

REVISIONS

No.	Description	Date

Project number
Date: 12/20/2022
Drawn by: DC
Checked by: DC

GENERAL NOTES

C001

Scale: AS SHOWN

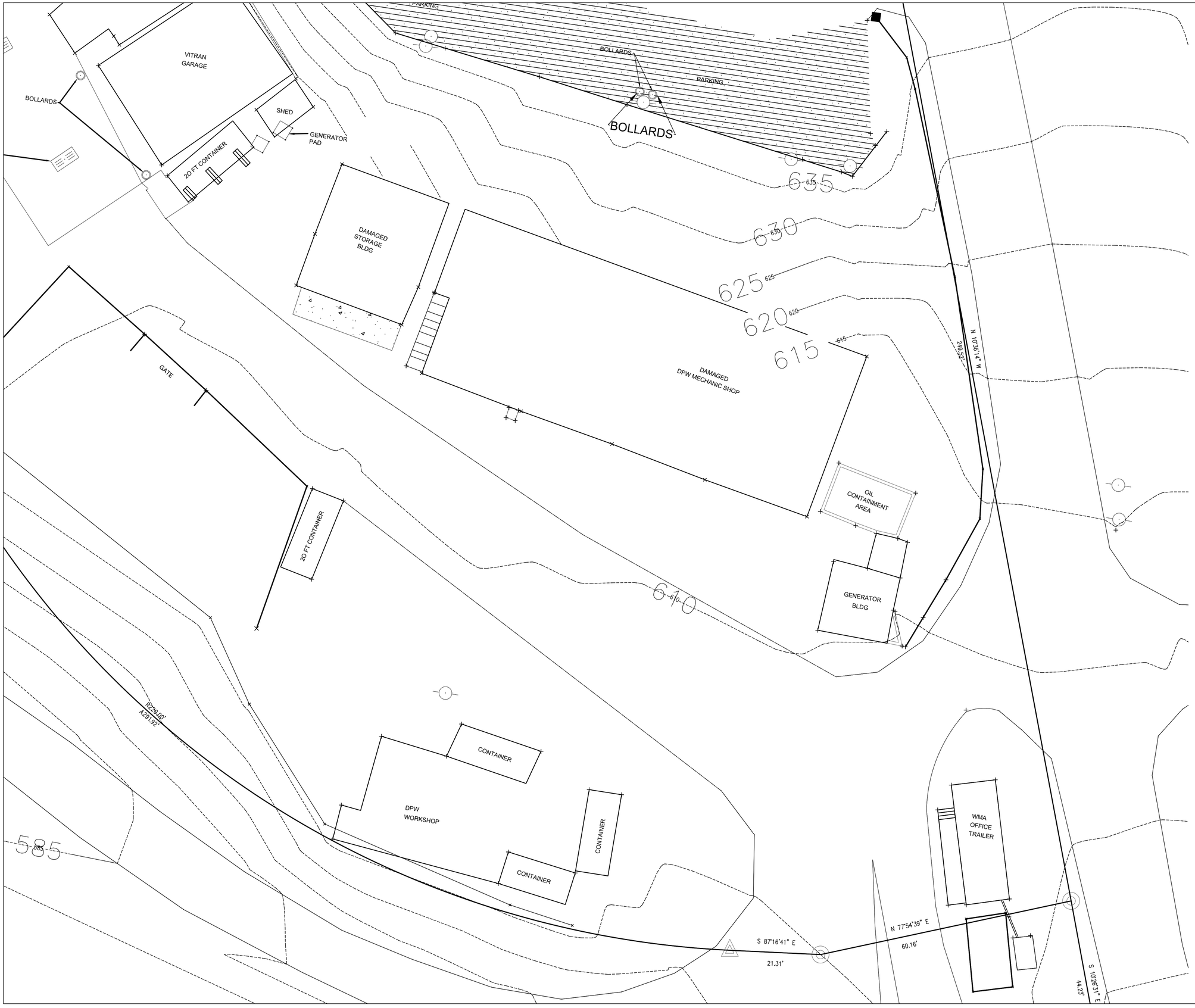

JDG

BOSCHULTE ARCHITECTURE

BUILDTEC

AGENCY:
VIRGIN ISLANDS
DEPARTMENT OF PUBLIC WORKS
6 Susannaberg
Cruz Bay, VI 00830
phone: (340) 776-6346
website: www.dpw.vi.gov

ARCHITECT:
BOSCHULTE-ARCHITECTURE, LLC
PO Box 303100
St. Thomas, VI 00803
41-42 Kongens Gade
St. Thomas, VI 00802
Cruz Bay, VI 00830
e-mail: info@boschulte.com
website: www.boschulte.com

CIVIL ENGINEER:
BUILDTEC, LLC
PO Box 1000
Christiansted, VI 00823
7-1 Bonne Esperance
Christiansted, VI 00820
phone: (340)513-9918
e-mail: dcartwright@buildtecvi.com

PROFESSIONAL ENGINEER
DAMIAN CARTWRIGHT
28851-IB
VIRGIN ISLANDS

STJ MAINTENANCE BUILDING FOR V.I. DEPT. OF PUBLIC WORKS 6 SUSANNABERG CRUZ BAY, VI 00830

PROGRESS SET

No.	Description	Date
1	100% PERMIT SET	07/14/23

REVISIONS

No.	Description	Date

Project number	
Date	12/20/2022
Drawn by	DC
Checked by	DC

EXISTING CONDITION PLAN

C002

Scale: AS SHOWN

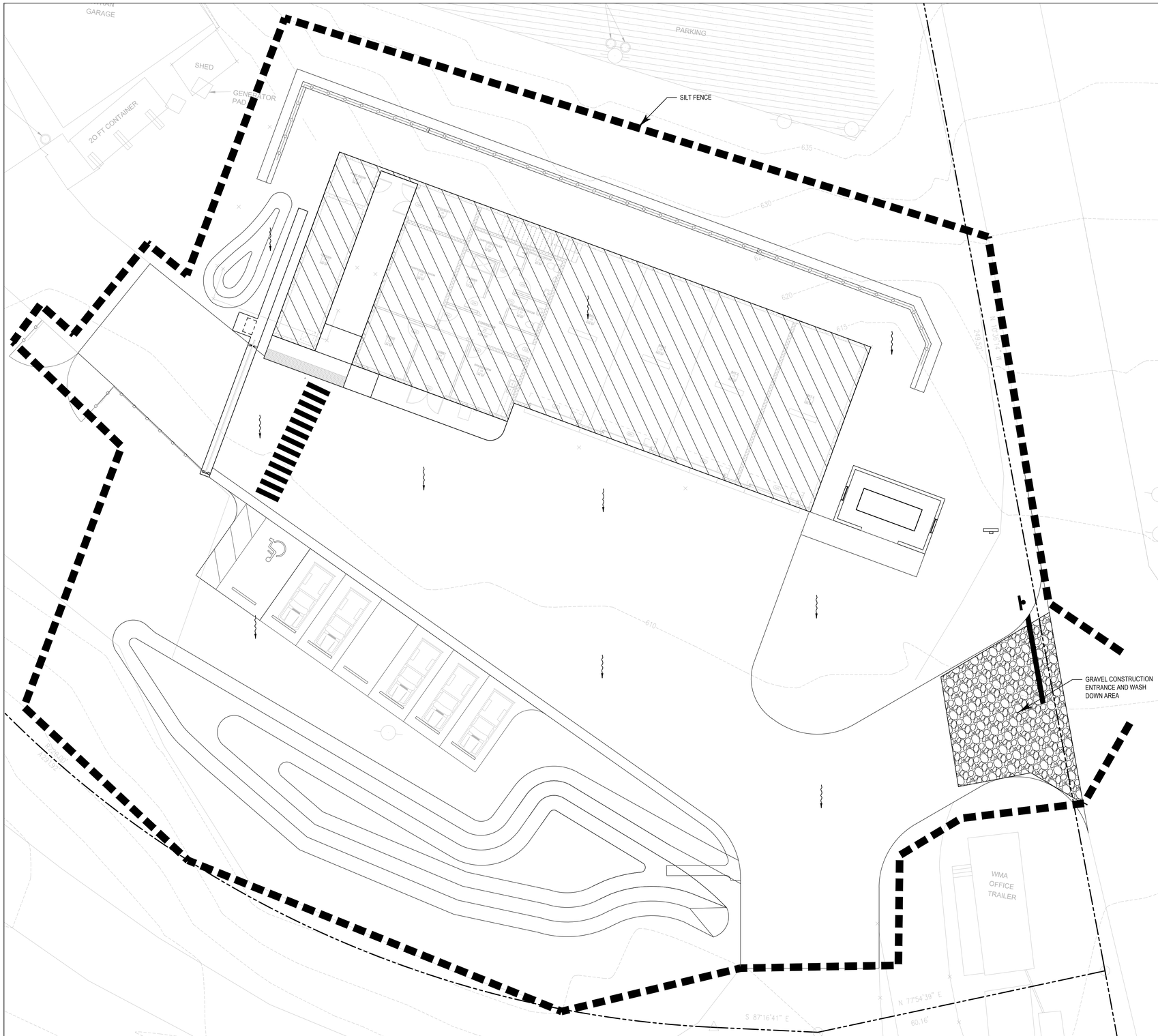

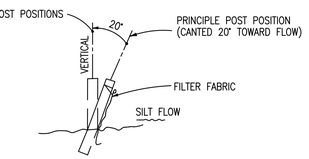

SECTION

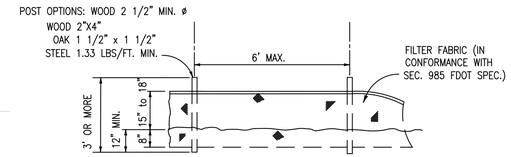

ELEVATION

NOTE: SILT FENCE TO BE PAID FOR UNDER THE CONTRACT UNIT PRICE FOR STAKED SILT FENCE (LF).

TYPE III SILT FENCE

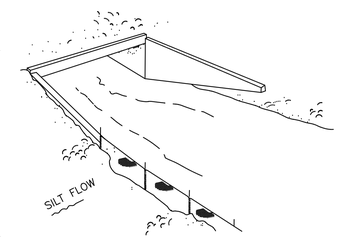

TYPE III SILT FENCE

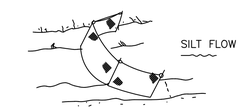

NOTE: SPACING FOR TYPE III FENCE TO BE IN ACCORDANCE WITH CHART I , SHEET 1 OF 3 AND DITCH INSTALLATIONS AT DRAINAGE STRUCTURES SHEET 2 OF 3.

TYPE III SILT FENCE

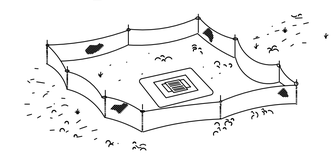

TYPE III SILT FENCE PROTECTION AROUND DITCH BOTTOM INLETS.

DO NOT DEPLOY IN A MANNER THAT SILT FENCES WILL ACT AS A DAM ACROSS PERMANENT FLOWING WATERCOURSES. SILT FENCES ARE TO BE USED AT UPLAND LOCATIONS AND TURBIDITY BARRIERS USED AT PERMANENT BODIES OF WATER.

SILT FENCE APPLICATIONS

TYPE III SILT FENCE

AS PER FDOT STANDARD INDEX #102

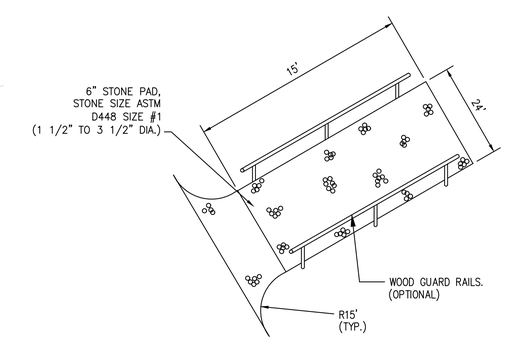

CONSTRUCTION ENTRANCE

LEGEND

- PROPERTY LINE
- SILT FENCE
- DRAINAGE FLOW
- GRAVEL CONSTRUCTION ENTRANCE AND WASH DOWN AREA
- PLACE FILTER FABRIC BENEATH RIM OF NEW DRAINAGE INLETS AND HAY BALES AROUND PERIMETER OF NEW DRAINAGE INLETS

0 10 20 40

JDG

BOSCHULTE ARCHITECTURE

BUILDTEC

AGENCY:
VIRGIN ISLANDS
DEPARTMENT OF PUBLIC WORKS
6 Susannaberg
Cruz Bay, VI 00830
phone: (340) 776-6346
website: www.dpw.vi.gov

ARCHITECT:
BOSCHULTE ARCHITECTURE, LLC
PO Box 303100
St. Thomas, VI00803
41-42 Kongens Gade
St. Thomas, VI 00802
phone: (340) 776-6205
e-mail: info@boschulte.com
website: www.boschulte.com

CIVIL ENGINEER:
BUILDTEC, LLC
PO Box 1000
Christiansted, VI 00823
7-1 Bonne Esperance
Christiansted, VI 00820
phone: (340)513-9918
e-mail: dcartwright@buildtecvi.com

PROFESSIONAL ENGINEER
DAMIAN CARTWRIGHT
28851-1B
VIRGIN ISLANDS

STJ MAINTENANCE BUILDING FOR V.I. DEPT. OF PUBLIC WORKS 6 SUSANNABERG CRUZ BAY, VI 00830

PROGRESS SET

No.	Description	Date
1	100% PERMIT SET	07/14/23

REVISIONS

No.	Description	Date

Project number	
Date	12/20/2022
Drawn by	DC
Checked by	DC

STORMWATER POLLUTION PREVENTION PLAN & DETAILS

C003

Scale: AS SHOWN

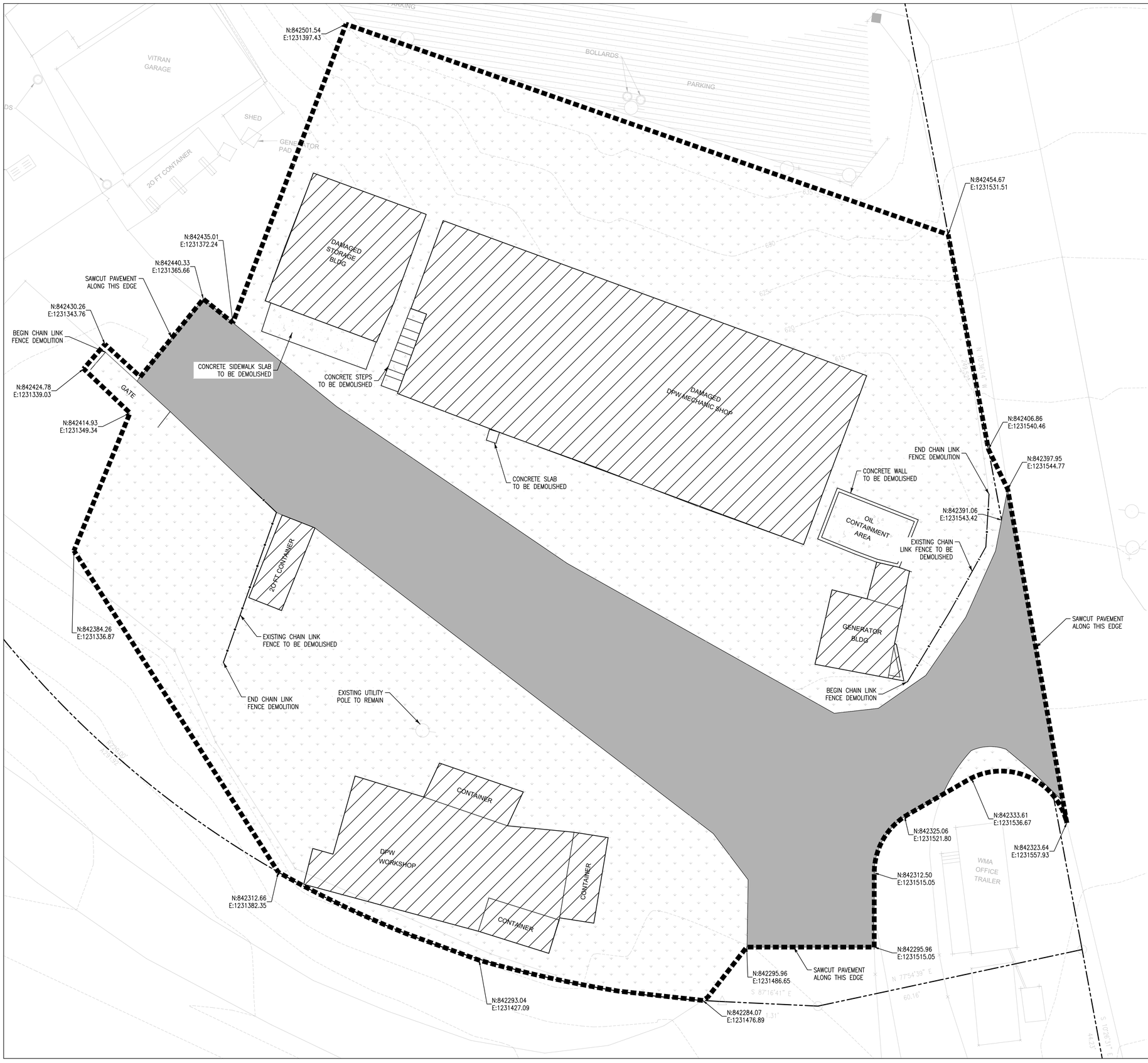

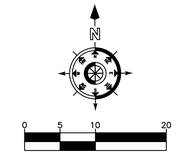

DEMOLITION LEGEND

- BUILDING DEMOLITION
- ASPHALTIC CONCRETE PAVEMENT DEMOLITION
- CONCRETE PAVEMENT DEMOLITION
- CLEARING AND GRUBBING
- DEMOLITION LIMITS
- RIGHT-OF-WAY / PROPERTY LINE

NOTE:

1. COORDINATE THIS PLAN SHEET WITH THE ARCHITECTURAL, STRUCTURAL AND M.E.P. DRAWINGS. NOTIFY ENGINEER OF ANY DISCREPANCIES PRIOR TO PROCEEDING WITH THE WORKS SHOWN ON THESE PLANS.
2. COORDINATE THIS PLAN SHEET WITH THE PROPOSED IMPROVEMENTS SHOWN IN THE CIVIL SHEET SET. NOTIFY ENGINEER OF ANY DISCREPANCIES PRIOR TO PROCEEDING WITH THE WORKS SHOWN ON THESE PLANS.
3. ALL DEMOLISHED MATERIALS SHALL BE LEGALLY DISPOSED OF.

JDG

BOSCHULTE ARCHITECTURE

BUILDTEC

AGENCY:
VIRGIN ISLANDS
DEPARTMENT OF PUBLIC WORKS
6 Susannaberg
Cruz Bay, VI 00830
phone: (340) 776-6346
website: www.dpw.vi.gov

ARCHITECT:
BOSCHULTE ARCHITECTURE, LLC
PO Box 303100
St. Thomas, VI 00803
41-42 Kongens Gade
St. Thomas, VI 00802
phone: (340) 776-1605
e-mail: info@boschulte.com
website: www.boschulte.com

CIVIL ENGINEER:
BUILDTEC, LLC
PO Box 1000
Christiansted, VI 00823
7-1 Bonne Esperance
Christiansted, VI 00820
phone: (340)513-9918
e-mail: dcartwright@buildtecengr.com

PROFESSIONAL ENGINEER
DAMIAN CARTWRIGHT
28851-1B
VIRGIN ISLANDS

STJ MAINTENANCE BUILDING FOR V.I. DEPT. OF PUBLIC WORKS 6 SUSANNABERG CRUZ BAY, VI 00830

PROGRESS SET

No.	Description	Date
1	100% PERMIT SET	07/14/23

REVISIONS

No.	Description	Date

Project number	
Date	12/20/2022
Drawn by	DC
Checked by	DC

DEMOLITION PLAN

C004

Scale: AS SHOWN

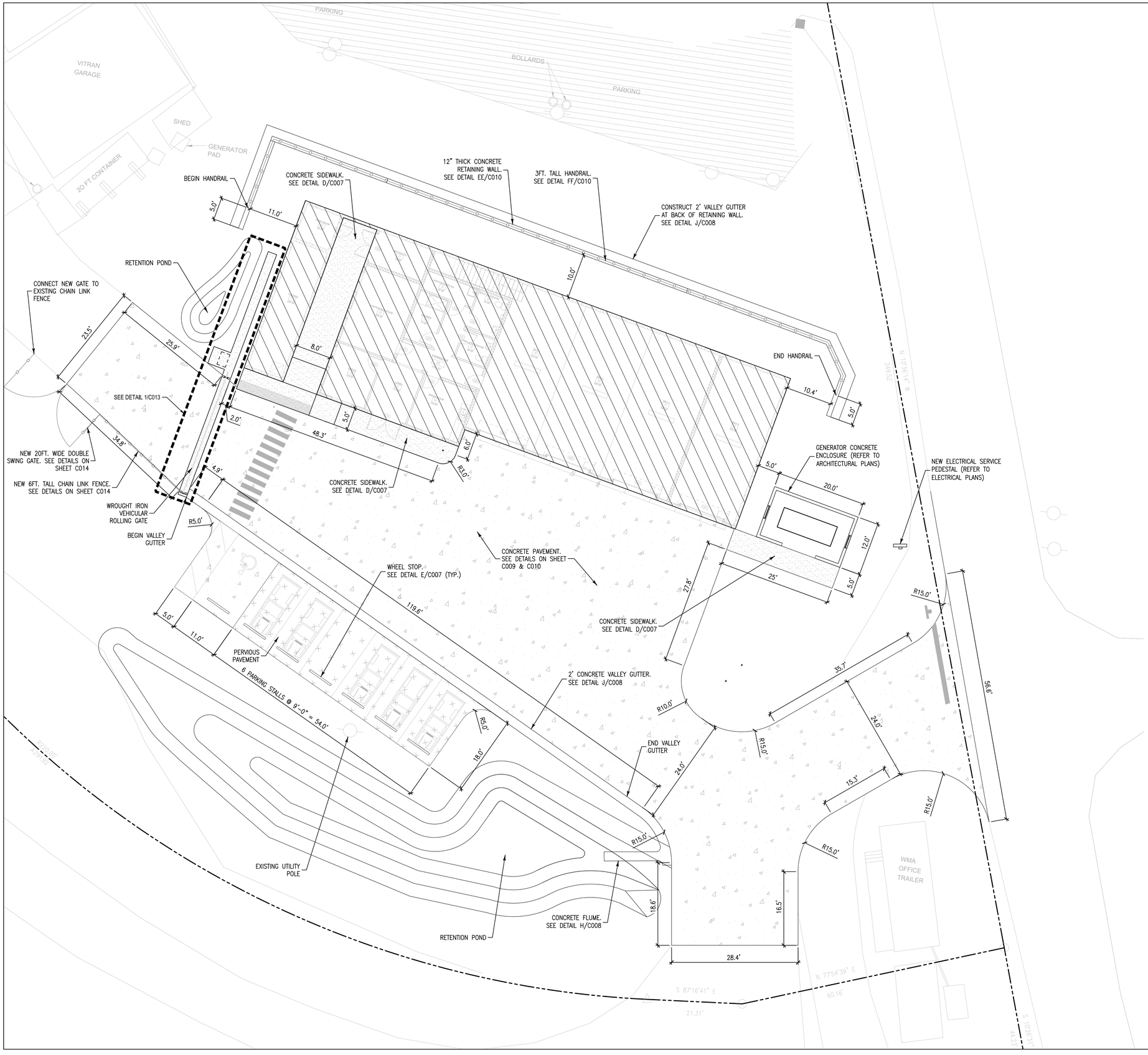

GRAPHIC SCALE IN FEET
0 5 10 20

NOTE:

1. COORDINATE THIS PLAN SHEET WITH THE ARCHITECTURAL, STRUCTURAL AND M.E.P. DRAWINGS. NOTIFY ENGINEER OF ANY DISCREPANCIES PRIOR TO PROCEEDING WITH THE WORKS SHOWN ON THESE PLANS

JDG
BOSCHULTE ARCHITECTURE
BUILDTEC

AGENCY:
VIRGIN ISLANDS
DEPARTMENT OF PUBLIC WORKS
6 Susannaberg
Cruz Bay, VI 00830
phone: (340) 776-6346
website: www.dpw.vi.gov

ARCHITECT:
BOSCHULTE ARCHITECTURE, LLC
PO Box 303100
St. Thomas, VI00803
41-42 Kongens Gade
St. Thomas, VI 00802
phone: (340) 776-0505
e-mail: info@boschulte.com
website: www.boschulte.com

CIVIL ENGINEER:
BUILDTEC, LLC
PO Box 1486
Christiansted, VI 00823
7-1 Bonne Esperance
Christiansted, VI 00820
phone: (340)513-9818
e-mail: dcartwright@buildtecevg.com

PROFESSIONAL ENGINEER
DAMIAN CARTWRIGHT
28851-1B
VIRGIN ISLANDS

STJ MAINTENANCE BUILDING FOR V.I. DEPT. OF PUBLIC WORKS 6 SUSANNABERG CRUZ BAY, VI 00830

PROGRESS SET

No.	Description	Date
1	100% PERMIT SET	07/14/23

REVISIONS

No.	Description	Date

Project number	
Date	12/20/2022
Drawn by	DC
Checked by	DC

SITE & GEOMETRY PLAN

C005

Scale: AS SHOWN

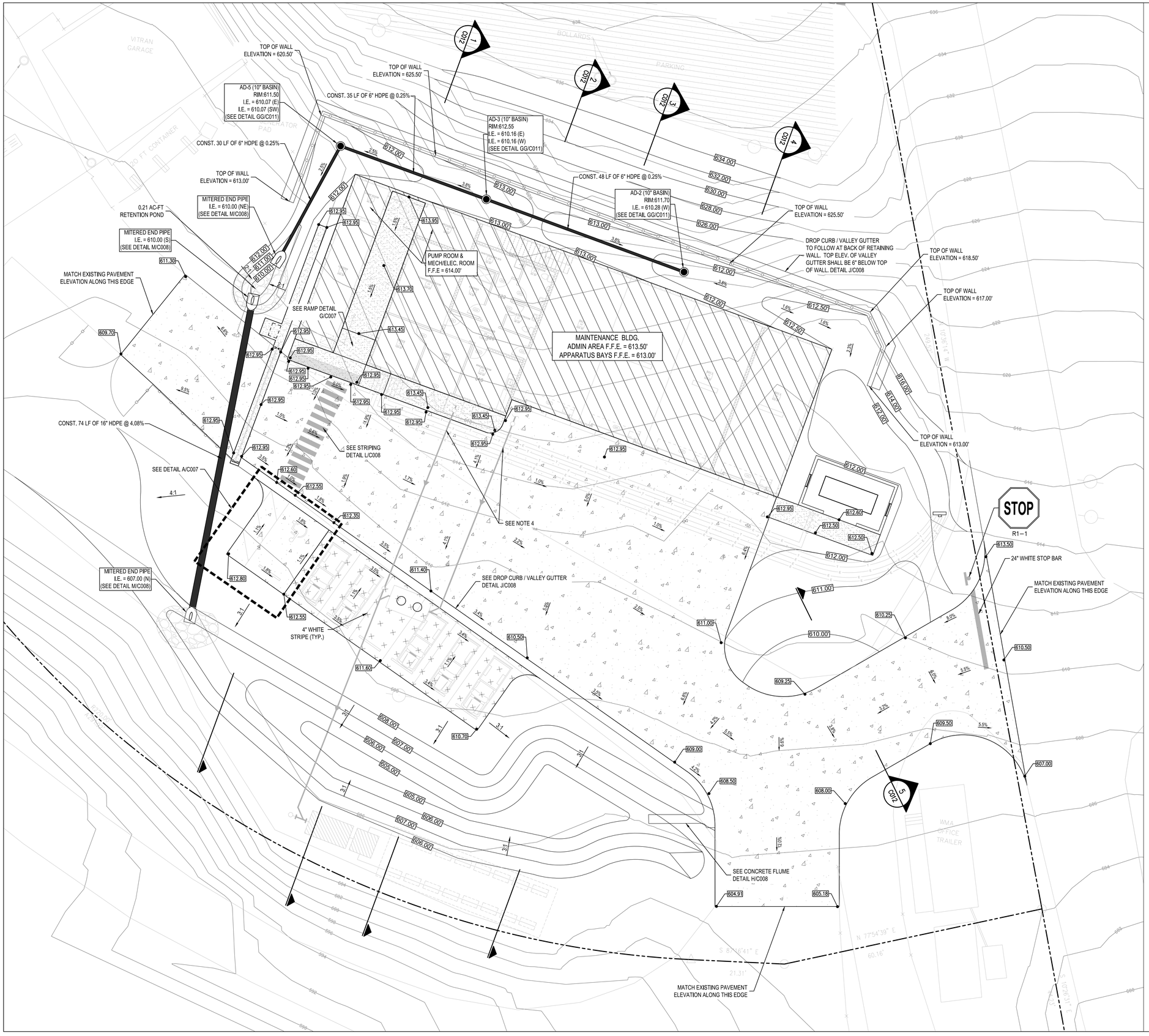

LEGEND

8" 4000 PSI CONCRETE PAVEMENT REINFORCED WITH #4 @ 8" O.C. EACH WAY (SEE JOINT PLAN AND DETAILS, AND REINFORCEMENT DETAILS ON SHEETS C009 & C010)

6" 3000 PSI CONCRETE SIDEWALK REINFORCED WITH 6"X6" W1.4XW1.4 WELDED WIRE FABRIC (SEE DETAIL D/C007)

RIGHT-OF-WAY / PROPERTY LINE

NEW STORM SEWER SYSTEM

NEW SANITARY SEWER LATERAL

NEW ELECTRICAL CONDUITS (REFER TO ELECTRICAL PLANS)

NEW TELECOM CONDUITS (REFER TO ELECTRICAL PLANS)

NOTES:

1. COORDINATE THIS PLAN SHEET WITH THE ARCHITECTURAL, STRUCTURAL AND M.E.P. DRAWINGS. NOTIFY ENGINEER OF ANY DISCREPANCIES PRIOR TO PROCEEDING WITH THE WORKS SHOWN ON THESE PLANS
2. COORDINATE THIS SHEET WITH DEMOLITION PLAN SHEET C004, SITE & GEOMETRY PLAN SHEET C005, & UTILITY PLAN SHEET C015
3. COORDINATE THIS PLAN SHEET WITH THE ELECTRICAL / TELECOM DRAWINGS & SPECIFICATIONS. NOTIFY ENGINEER OF ANY DISCREPANCIES PRIOR TO PROCEEDING WITH THE WORKS SHOWN ON THESE PLANS
4. ELECTRICAL & TELECOM DUCT BANK TO CROSS BELOW SANITARY SEWER LINE WITH MINIMUM 12" CLEAR SEPARATION
5. ALL DIRT/GREEN AREAS TO REMAIN THAT WERE DISTURBED AS A RESULT OF PROPOSED IMPROVEMENTS SHALL BE HYDRO-SEEDED AT THE END OF THE PROJECT AND WATERED ON A REGULAR BASIS FOR A MINIMUM OF 1 MONTH THEREAFTER OR UNTIL THE GRASS HAS CAUGHT

JDG

BOSCHULTE ARCHITECTURE

BUILDTEC

AGENCY:
VIRGIN ISLANDS
DEPARTMENT OF PUBLIC WORKS
6 Susannaberg
C-Cruz Bay, VI 00830
phone: (340) 776-6346
website: www.dpw.vi.gov

ARCHITECT:
BOSCHULTE ARCHITECTURE, LLC
PO Box 303100
St. Thomas, VI 00803
41-42 Kongens Gade
St. Thomas, VI 00802
phone: (340) 776-6235
e-mail: info@boschulte.com
website: www.boschulte.com

CIVIL ENGINEER:
BUILDTEC, LLC
PO Box 1486
Christiansted, VI 00823
7-1 Bonne Esperance
Christiansted, VI 00820
phone: (340)513-9918
e-mail: dcartwright@buildtecvi.com

PROFESSIONAL ENGINEER
DAMIAN CARTWRIGHT
28851-1B
VIRGIN ISLANDS

STJ MAINTENANCE BUILDING FOR V.I. DEPT. OF PUBLIC WORKS 6 SUSANNABERG CRUZ BAY, VI 00830

PROGRESS SET

No.	Description	Date
1	100% PERMIT SET	07/14/23

REVISIONS

No.	Description	Date

Project number	
Date	12/20/2022
Drawn by	DC
Checked by	DC

PAVING, GRADING & DRAINAGE PLAN

C006

Scale: AS SHOWN

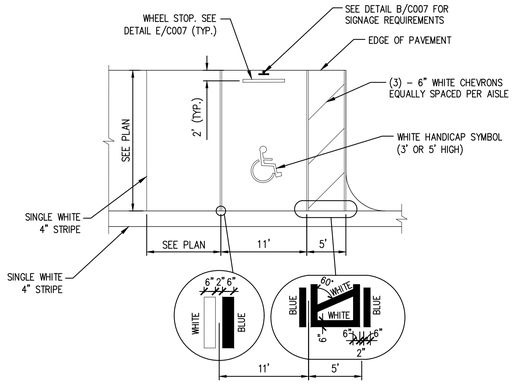

NOTE: FINISHED GRADES OF PAVEMENT IN HC PARKING AND ACCESSIBILITY AISLE SHALL NOT EXCEED 1:50 SLOPE IN ANY DIRECTION.
SEE PLAN FOR STYLE OF HANDICAP RAMP
HANDICAP STRIPING SHALL CONFORM TO FDOT INDEX 17346 (LATEST EDITION)

A — HANDICAP STRIPING
NOT TO SCALE

NOTES:
1. ALL LETTERS ARE 1" SERIES "C" PER MUTCD.
2. TOP PORTION OF SIGN SHALL HAVE A REFLECTORIZED (ENGINEERING GRADE) BLUE BACKGROUND WITH WHITE REFLECTORIZED LEGEND AND BORDER.
3. BOTTOM PORTION OF SIGN SHALL HAVE A REFLECTORIZED (ENGINEERING GRADE) WHITE BACKGROUND WITH BLACK OPAQUE LEGEND AND BORDER.
4. FINE NOTIFICATION SIGN SHALL HAVE A REFLECTORIZED (ENGINEERING GRADE) WHITE BACKGROUND WITH BLACK OPAQUE LEGEND & BORDER. CONTRACTOR SHALL VERIFY FINE AMOUNT & ORDINANCE NUMBER.
5. ONE(1) SIGN REQUIRED FOR EACH PARKING SPACE.
6. INSTALLED HEIGHT OF SIGN SHALL BE IN ACCORDANCE WITH SECTION 24–23 OF THE MANUAL ON UNIFORM TRAFFIC CONTROL DEVICES (MUTCD).
7. SIGN MAY BE MOUNTED ON BUILDING/WALL, AT PROPER HEIGHT, IF ALIGNED WITHIN 12" OF CENTER OF PARKING SPACE.

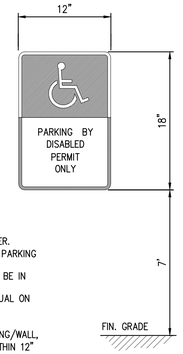

B — HANDICAP SIGN
NOT TO SCALE

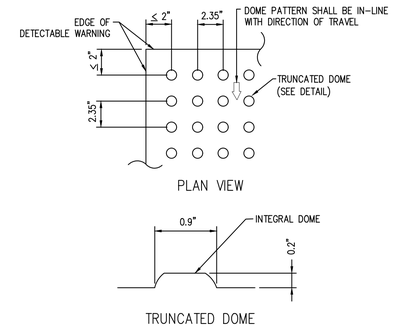

NOTE:

1. CURB RAMP RUNNING SLOPES SHALL NOT BE STEEPER THAN 1:12 AND CROSS SLOPE SHALL BE 0.02 OR FLATTER.

2. DETECTABLE WARNING SURFACES SHALL BE CONSTRUCTED BY TEXTURING OR APPLYING A TRUNCATED DOME MATERIAL IN CONFORMANCE WITH THE U.S. DEPARTMENT OF JUSTICE A.D.A. STANDARDS FOR ACCESSIBLE DESIGN, A.D.A. ACCESSIBILITY GUIDELINES, SECTION 4.29.2. TRANSITION SLOPES ARE NOT TO HAVE DETECTABLE WARNINGS.

3. WHERE A CURB RAMP IS CONSTRUCTED WITHIN AN EXISTING CURB, CURB AND GUTTER AND/OR SIDEWALK, THE EXISTING CURB OR CURB AND GUTTER SHALL BE REMOVED TO THE NEAREST JOINT BEYOND THE CURB TRANSITIONS OR TO THE EXTENT THAT NO REMAINING SECTION OF CURB OR CURB AND GUTTER IS LESS THAN 5' LONG. THE EXISTING SIDEWALK SHALL BE REMOVED TO THE NEAREST JOINT BEYOND THE TRANSITION SLOPE WALK AROUND OR TO THE EXTENT THAT NO REMAINING SECTION OF SIDEWALK IS LESS THAN 5'.

4. WHERE ADJACENT WALKING SURFACES ARE COLORED OR ARE CONSTRUCTED WITH MATERIALS OTHER THAN STANDARD CLASS I PORTLAND CEMENT CONCRETE IN ACCORDANCE WITH SECTION 522 OF THE SPECIFICATIONS, THE PLAN MUST PROVIDE FOR DETECTABLE WARNING SURFACE COLORS OR MATERIALS THAT PROVIDE THE NECESSARY CONTRAST, EITHER DARK–ON–LIGHT OR LIGHT–ON–DARK. (SAFETY YELLOW OR BRICK RED)

5. RECOMMENDED MANUFACTURER: ENGINEERED PLASTICS, INC. (ARMOR TILE) OLYMPIC TOWERS, 300 PEARL STREET, SUITE 200, BUFFALO, NY 14202. PHONE: (800) 682–2525

C — DETECTABLE WARNING
NOT TO SCALE

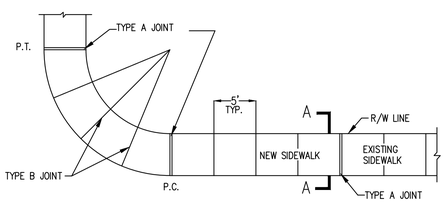

PLAN VIEW

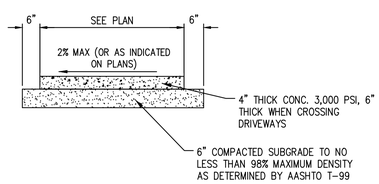

SECTION A–A

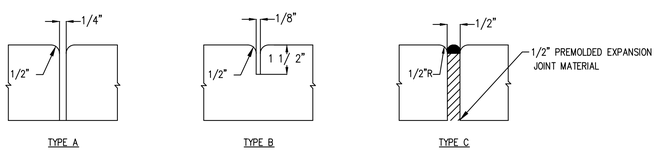

TYPE A TYPE B TYPE C

TABLE OF SIDEWALK THICKNESS – T	
LOCATION	
STANDARD SIDEWALK	6"

TABLE OF SIDEWALK JOINTS	
	LOCATION
A	P.C. AND P.T. OF CURVES. JUNCTION OF EXISTING AND NEW SIDEWALK.
B	5'–0" CENTER TO CENTER ON SIDEWALK.
C	WHERE SIDEWALK ABUTS CONCRETE CURBS, DRIVEWAYS, AND SIMILAR STRUCTURES

NOTES:
1. PLACE W1.4XW1.4 6"x6" WIRE MESH IN THE SIDEWALK
2. STANDARD SIDEWALK TO BE 4000 PSI @ 28 DAYS
3. CURE ALL CONCRETE WITH CLEAN SAND, PLASTIC MEMBRANE, OR OTHER APPROVED METHOD.
4. TOOLED JOINTS TO OCCUR AT INTERVALS EQUAL TO WIDTH OF SIDEWALK
5. SIDEWALK TO HAVE BROOM FINISH PERPENDICULAR TO PATH OF TRAVEL.
6. CONTRACTOR SHALL REPAIR AND RESTORE ALL AREAS WITHIN THE ABUTTING R/W DISTURBED DURING CONSTRUCTION TO A CONDITION EQUAL TO OR BETTER THAN EXISTING AT NO ADDITIONAL COST TO THE OWNER.
7. ALL DEMOLISHED SIDEWALKS AND ADDITIONS ARE TO BE REPLACED WITH CONCRETE SIDEWALK TO MATCH EXISTING AT NO ADDITIONAL COST TO THE OWNER.
8. ALL DEMOLISHED SIDEWALK RAMPS ARE TO BE REPLACED AS PER ADA STANDARDS AND INCLUDE ADA COMPLIANT DETECTABLE WARNINGS AT NO ADDITIONAL COST TO THE OWNER.

D — CONCRETE SIDEWALK
NOT TO SCALE

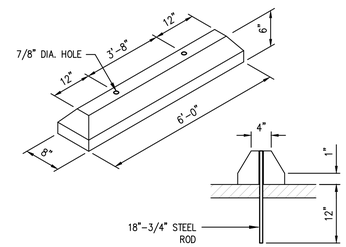

NOTE:
CONCRETE SHALL BE 3,500 PSI 28 DAY STRENGTH

E — WHEEL STOP
NOT TO SCALE

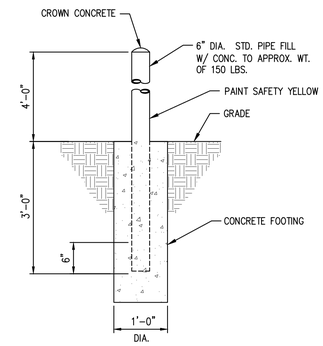

F — BOLLARD
NOT TO SCALE

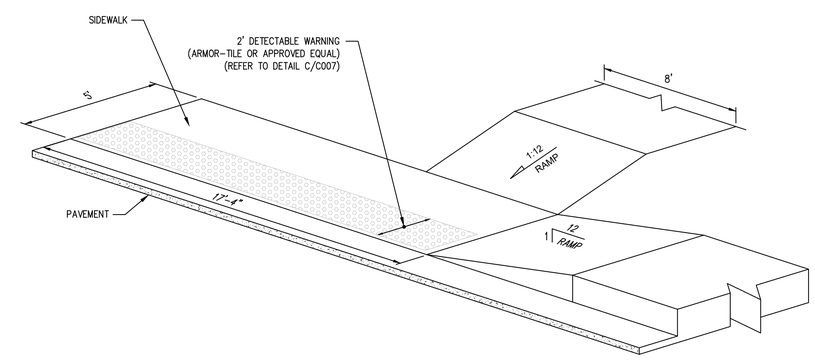

NOTE 1:
REFERENCE FDOT INDEX 304, PAGE 1, GENERAL AND DESIGN NOTES FOR RAMPS IN R.O.W.

NOTE 2:
CONSTRUCT RAMP TO LEAST POSSIBLE SLOPE (MAX = 1:12). CROSS SLOPE OF RAMP AND LANDING SHALL NOT EXCEED 1:50.

NOTE 3:
RAMP GREATER THAN A 6" RISE REQUIRES HANDRAILS.

G — HANDICAP RAMP
NOT TO SCALE

JDG
BOSCHULTE ARCHITECTURE
BUILDTEC

AGENCY:
VIRGIN ISLANDS
DEPARTMENT OF PUBLIC WORKS
6 Susannaberg
Cruz Bay, VI 00830
phone: (340) 776-6346
website: www.dpw.vi.gov

ARCHITECT:
BOSCHULTE ARCHITECTURE, LLC
PO Box 303100
St. Thomas, VI00803
41-42 Kongens Gade
St. Thomas, VI 00802
phone: (340) 777-7255
e-mail: info@boschulte.com
website: www.boschulte.com

CIVIL ENGINEER:
BUILDTEC, LLC
PO Box 1000
Christiansted, VI 00823
7-1 Bonne Esperance
Christiansted, VI 00820
phone: (340)513-9918
e-mail: dcartwright@buildteceng.com

PROFESSIONAL ENGINEER
DAMIAN CARTWRIGHT
28851-18
VIRGIN ISLANDS

STJ MAINTENANCE BUILDING
FOR
V.I. DEPT. OF PUBLIC WORKS
6 SUSANNABERG
CRUZ BAY, VI 00830

PROGRESS SET

No.	Description	Date
1	100% PERMIT SET	07/14/23

REVISIONS

No.	Description	Date

Project number	
Date	12/20/2022
Drawn by	DC
Checked by	DC

PAVING, GRADING & DRAINAGE DETAILS

C007

Scale: AS SHOWN

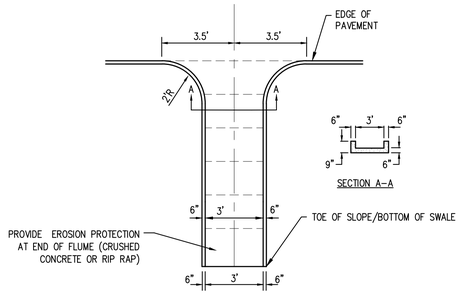

H CONCRETE FLUME
NOT TO SCALE

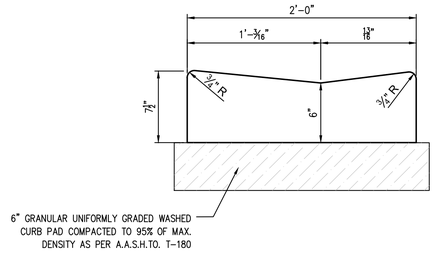

J DROP CURB / VALLEY GUTTER
NOT TO SCALE

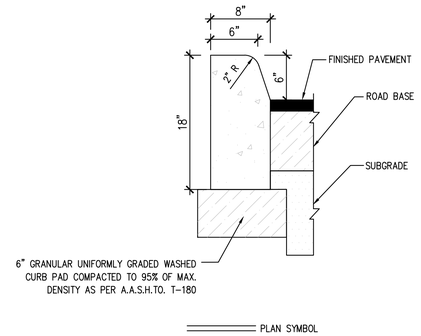

K TYPE D CURB
NOT TO SCALE

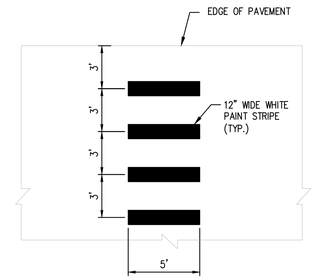

L SPECIAL EMPHASIS CROSSWALK MARKING DETAIL
NOT TO SCALE

STORM SEWER PIPE LENGTHS NOTED IN THE DRAWINGS REFLECT ONLY THE PIPE ITSELF. WHERE A MITERED END SECTION IS INSTALLED ON SAID PIPE, ITS ADDITIONAL PIPE LENGTH SHALL BE INCLUDED IN THE COST OF THE MITERED END SECTION.

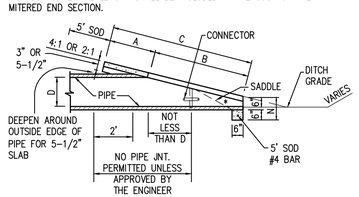

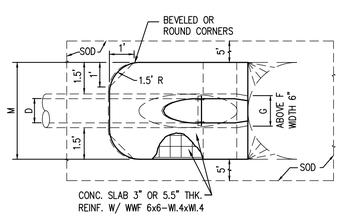

DIMENSIONS AND QUANTITIES											
								M			
	D	A	B	C	E	F	G	SINGLE PIPE	DOUBLE PIPE	TRIPLE PIPE	QUAD. PIPE
2:1 SLOPE	15"	1.92'	2.18'	4.10'	2.06'	5'	1.22'	4.63'	7.21'	9.79'	12.37'
	18"	1.97'	2.74'	4.71'	2.56'	6'	1.41'	4.92'	7.75'	10.58'	13.42'
	24"	2.06'	3.85'	5.91'	3.56'	7'	1.73'	5.50'	8.92'	12.33'	15.75'
	30"	2.15'	4.95'	7.10'	4.56'	8'	2.00'	6.08'	10.33'	14.58'	18.83'
	36"	2.25'	6.08'	8.33'	5.56'	9'	2.24'	6.67'	11.75'	16.83'	21.92'
	42"	2.34'	7.21'	9.55'	6.56'	10'	2.45'	7.25'	13.25'	19.25'	25.25'
	48"	2.43'	8.33'	10.76'	7.56'	11'	2.65'	7.83'	14.58'	21.33'	28.08'
	54"	2.52'	9.44'	11.96'	8.56'	12'	2.83'	8.42'	16.08'	23.75'	31.42'
	60"	2.62'	10.56'	13.18'	9.56'	14'	3.00'	9.00'	17.50'	26.00'	34.50'
	66"	2.71'	11.68'	14.39'	10.56'	15'	3.18'	9.58'	18.75'	27.92'	37.08'
	72"	2.80'	12.80'	15.60'	11.56'	16'	3.30'	10.16'	20.16'	30.16'	40.16'
4:1 SLOPE	15"	2.27'	4.09'	6.36'	4.03'	8'	1.22'	4.63'	7.21'	9.79'	12.37'
	18"	2.36'	5.12'	7.48'	5.03'	9'	1.41'	4.92'	7.75'	10.58'	13.42'
	24"	2.53'	7.18'	9.71'	7.03'	11'	1.73'	5.50'	8.92'	12.33'	15.75'
	30"	2.70'	9.25'	11.95'	9.03'	13'	2.00'	6.08'	10.33'	14.58'	18.83'
	36"	2.87'	11.31'	14.18'	11.03'	15'	2.24'	6.67'	11.75'	16.83'	21.92'
	42"	3.05'	13.37'	16.42'	13.03'	17'	2.45'	7.25'	13.25'	19.25'	25.25'
	48"	3.22'	15.43'	18.65'	15.03'	19'	2.65'	7.83'	14.58'	21.33'	28.08'
	54"	3.39'	17.49'	20.88'	17.03'	21'	2.83'	8.42'	16.08'	23.75'	31.42'
	60"	3.56'	19.55'	23.11'	19.03'	23'	3.00'	9.00'	17.50'	26.00'	34.50'
	66"	3.73'	21.62'	25.35'	21.03'	25'	3.18'	9.58'	18.75'	27.92'	37.08'
	72"	3.91'	22.68'	26.59'	23.03'	27'	3.30'	10.16'	20.16'	30.16'	40.16'

*SLOPE– 4:1 MITER – TO ℄ PIPE FOR PIPES 18" AND SMALLER
2:1 FOR PIPES 24" AND LARGER
2:1 MITER – TO ℄ PIPE FOR PIPES 18" AND SMALLER
1:1 FOR PIPES 24" AND LARGER

M MITERED END SECTION (MES)
NOT TO SCALE

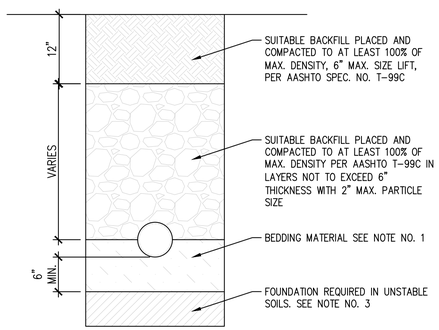

NOTES:
1. UNLESS OTHERWISE SPECIFIED, BEDDING MATERIAL SHALL CONSIST OF SELECT BACKFILL MATERIAL 2" MAXIMUM PARTICLE SIZE, COMPACTED TO AT LEAST 100% OF MAX. DENSITY, 6" LIFTS, PER AASHTO SPEC. NO. T–99C
2. WHERE REQUIRED, SHEETING AND SHORING SHALL BE IN ACCORDANCE WITH OSHA REQUIREMENTS.
3. WHERE UNSTABLE SOILS ARE ENCOUNTERED, INCLUDING PEAT, MUCK OR OTHER ORGANIC SOILS, ELASTIC SILT AND CLAYS, A FOUNDATION IS REQUIRED AS DETERMINED BY THE ENGINEER.

N TYPICAL TRENCH BACKFILL
NOT TO SCALE

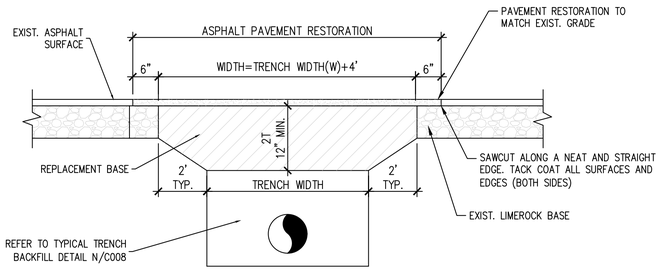

GENERAL NOTES:
1. REPLACED BASE MATERIAL OVER DITCH SHALL BE TWICE THE THICKNESS OF THE ORIGINAL BASE. BUT NOT LESS THAN 12".
2. BASE MATERIAL SHALL BE PLACED IN 6 INCH MAXIMUM LAYERS AND EACH LAYER THOROUGHLY ROLLED OR TAMPED TO 98% OF MAXIMUM DENSITY, PER AASHTO T–180. BASE MATERIAL SHALL HAVE A MINIMUM LBR OF 100.
3. ASPHALTIC CONCRETE PAVEMENT JOINTS SHALL BE MECHANICALLY SAWED.
4. SURFACE TREATED PAVEMENT JOINTS SHALL BE LAPPED AND FEATHERED. PAVEMENT MATERIAL SHALL BE FDOT TYPE SP–9.5 (FINE MIX) ASPHALTIC CONCRETE STRUCTURAL COURSE (1" THICK). MATCH EXISTING GRADES AT LIMIT OF SAWCUT.
5. UPON COMPLETION OF TRENCHING AND TRENCH/PAVEMENT RESTORATION FOR THE ENTIRE PROJECT, RESURFACE ENTIRE ROADWAY WIDTH WITH FDOT TYPE SP–9.5 (FINE MIX) ASPHALTIC CONCRETE SURFACE COURSE OVERLAY (1" MINIMUM THICKNESS).
6. BID PRICES FOR PIPE AND/OR FRENCH DRAIN SHALL INCLUDE PAVEMENT RESTORATION TO MATCH EXISTING GRADES. CONTRACTOR SHALL NOT LEAVE MORE THAN 1,000–FEET OF EXPOSED LIMEROCK BASE AT ANY TIME DURING THE TRENCH/PAVEMENT RESTORATION PROCESS. ONLY THE FDOT TYPE SP–9.5 (FINE MIX) ASPHALTIC CONCRETE SURFACE COURSE OVERLAY WILL BE PAID SEPARATELY.
7. WHEN TRENCHING OUTSIDE THE PAVEMENT AREA, ASPHALT AND BASE MATERIAL REFERENCED IN GENERAL NOTES 1–5 ARE NOT REQUIRED. RESTORE OR REPLACE ALL PUBLIC OR PRIVATE PROPERTY TO A CONDITION AT LEAST EQUAL TO THAT EXISTING IMMEDIATELY PRIOR TO COMMENCEMENT OF CONSTRUCTION. ALL IMPACTED AREAS SHALL BE COMPACTED TO 95% DENSITY IN 6–INCH MAXIMUM LIFTS.
8. CONTRACTOR SHALL REFER TO GEOTECHNICAL REPORT FOR ADDITIONAL SOILS INFORMATION TO UNDERSTAND EXISTING CONDITIONS.

0 PAVEMENT RESTORATION
NOT TO SCALE

JDG
BOSCHULTE ARCHITECTURE
BUILDTEC

AGENCY:
VIRGIN ISLANDS
DEPARTMENT OF PUBLIC WORKS
6 Susannaberg
Cruz Bay, VI 00830
phone: (340) 776-6346
website: www.dpw.vi.gov

ARCHITECT:
BOSCHULTE ARCHITECTURE, LLC
PO Box 303100
St. Thomas, VI00803
41-42 Kongens Gade
St. Thomas, VI 00802
phone: (340) 777-7205
e-mail: info@boschulte.com
website: www.boschulte.com

CIVIL ENGINEER:
BUILDTEC, LLC
PO Box 1449
Christiansted, VI 00823
71 Bonne Esperance
Christiansted, VI 00820
phone: (340)513-6918
e-mail: dcartwright@buildtecengr.com

PROFESSIONAL ENGINEER
DAMIAN CARTWRIGHT
26851 -1B
VIRGIN ISLANDS

STJ MAINTENANCE BUILDING FOR V.I. DEPT. OF PUBLIC WORKS 6 SUSANNABERG CRUZ BAY, VI 00830

PROGRESS SET

No.	Description	Date
1	100% PERMIT SET	07/14/23

REVISIONS

No.	Description	Date

Project number
Date 12/20/2022
Drawn by DC
Checked by DC

PAVING, GRADING & DRAINAGE DETAILS

C008

Scale: AS SHOWN

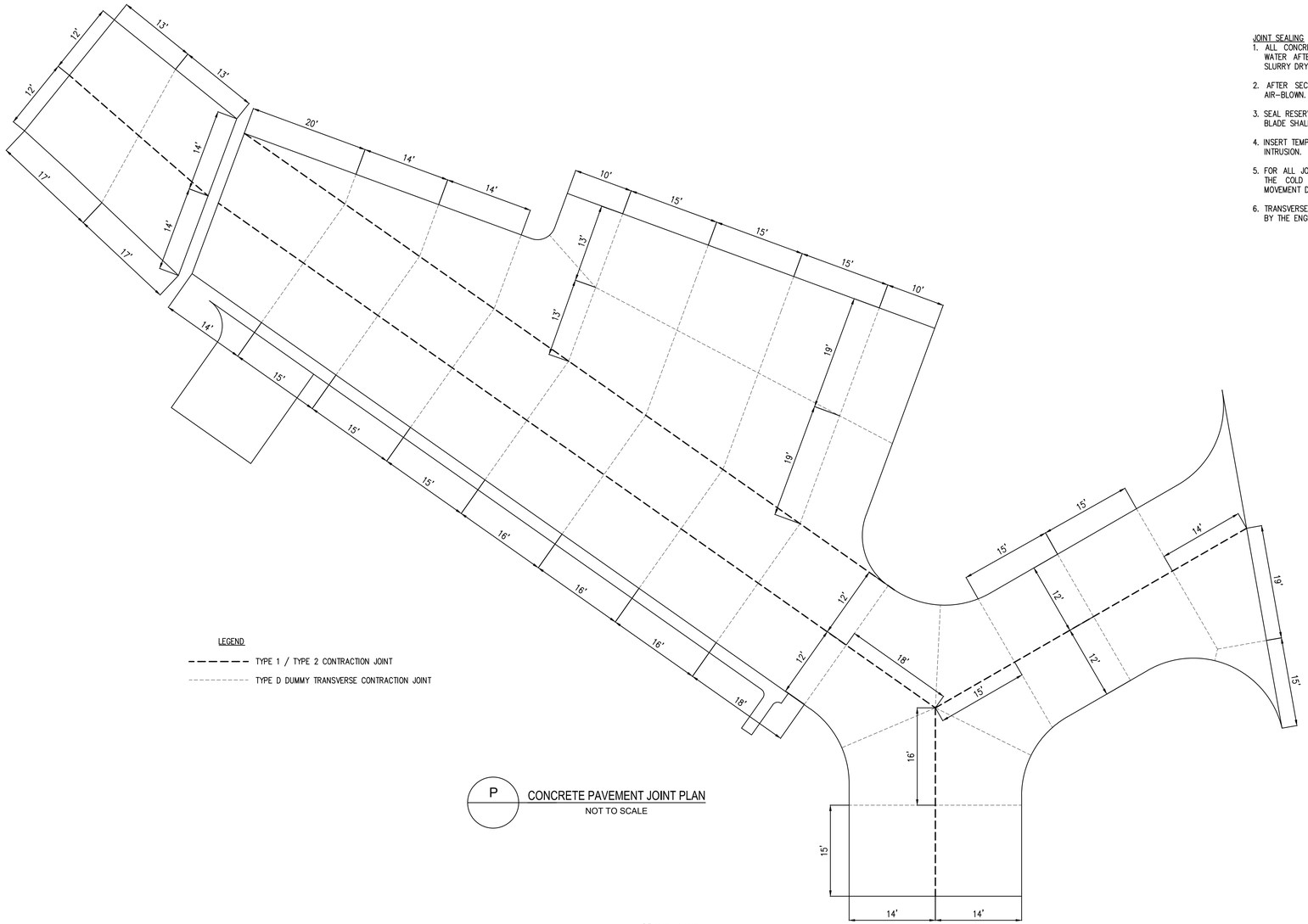

LEGEND

TYPE 1 / TYPE 2 CONTRACTION JOINT

TYPE D DUMMY TRANSVERSE CONTRACTION JOINT

P CONCRETE PAVEMENT JOINT PLAN
NOT TO SCALE

JOINT SEALING

1. ALL CONCRETE SURFACES AND JOINTS SHALL BE FLUSHED CLEAN WITH WATER AFTER BOTH INITIAL AND FINAL SAW- CUTS, PRIOR TO SAWCUT SLURRY DRYING.
2. AFTER SECOND SAWCUT, JOINT FACES SHALL BE SAND BLASTED AND AIR-BLOWN.
3. SEAL RESERVOIR SHALL BE FORMED USING SECOND SAWCUT. SHOULDERED BLADE SHALL NOT BE USED WITH INITIAL SAWCUT.
4. INSERT TEMPORARY BACKER ROD AFTER INITIAL SAWCUT TO PREVENT DEBRIS INTRUSION.
5. FOR ALL JOINTS THE BACKER ROD MATERIAL SHALL BE COMPATIBLE WITH THE COLD POURED SEALANT AND SLIGHTLY OVERSIZED TO PREVENT MOVEMENT DURING THE JOINT SEALANT OPERATION.
6. TRANSVERSE CONSTRUCTION JOINTS SHALL BE USED ONLY WHEN APPROVED BY THE ENGINEER.

DOWEL AND TIE BAR NOTES

1. DOWEL OR TIE BAR INSERTERS SHALL NOT BE USED.
2. DRILLING METHOD SHALL MAINTAIN DRILL HOLES PARALLEL TO CONCRETE SURFACE AND NORMAL TO JOINT LINE WITHIN 1/4" ± AT END OF DOWEL BAR. USE GANG DRILL WITH 3 OR MORE DRILLS. DRILL HOLE MAXIMUM DEVIATION SHALL NOT EXCEED 1" HORIZONTAL HOLE DIAMETER TO BE APPROXIMATELY 1/8" – 1/4" LARGER THAN DOWEL. MINIMUM THREE DAYS CURE TIME AND 300 PSI FLEXURAL STRENGTH REQUIRED FOR DRILLING NEW CONCRETE.
3. AFTER DRILLING IS COMPLETE, AND PRIOR TO INSTALLATION OF DOWELS, THOROUGHLY CLEAN HOLES BY FLUSHING. ALLOW TO DRY. AIR BLOW TO REMOVE DRILLING DUST, CONCRETE CHIPS, AND ANY MATERIAL DETRIMENTAL TO DEVELOPING BOND.
4. INSERT EPOXY INTO BACK OF DOWEL HOLE BY INJECTION NOZZLE WITH SUFFICIENT EPOXY PLACED SO SLIGHT AMOUNT FORCED OUT WHEN DOWEL INSERTED AND TAPPED TO CORRECT POSITION. DOWEL SHALL BE TURNED WHEN INSERTED AND EPOXY SHALL BE SOLID AROUND BARS WITH NO VOIDS. INSTALL PLASTIC DOWEL RINGS TO RETAIN EPOXY. SMALL WEDGES MAY BE USED TO SUPPORT DOWEL IN CORRECT ALIGNMENT UNTIL EPOXY HARDENS. SUBMIT PROPOSED EPOXY INFORMATION FOR APPROVAL PRIOR TO STARTING WORK.
5. "T" = THICKNESS OF NEW CONCRETE PAVEMENT
6. "d" = DOWEL OR TIE-BAR DIAMETER

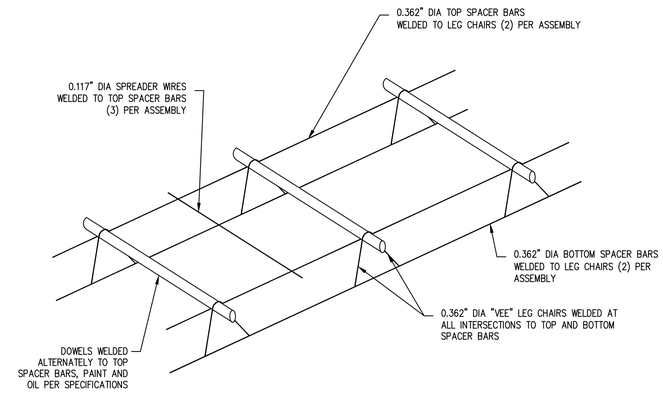

Q TYPICAL DOWEL AND TIE BAR BASKET
NOT TO SCALE

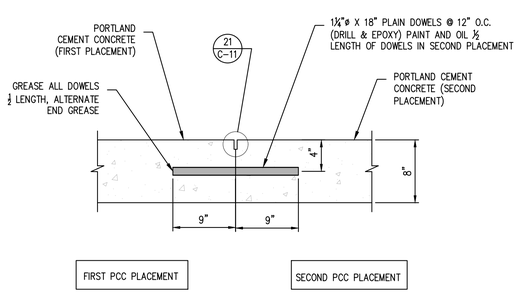

R TYPE 1 - CONTRACTION JOINT (DOWELED)
NOT TO SCALE

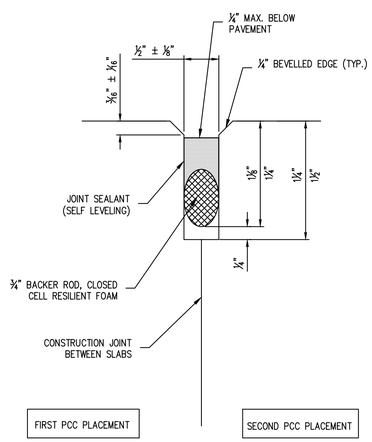

S TYPE 1 - CONTRACTION JOINT
NOT TO SCALE

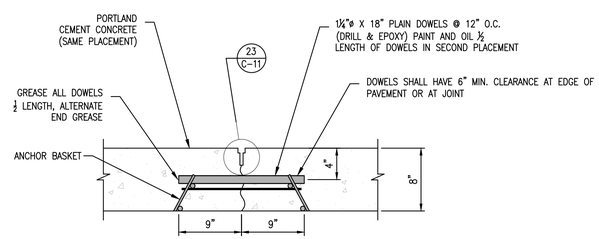

T TYPE 2 - CONTRACTION JOINT (DOWELED)
NOT TO SCALE

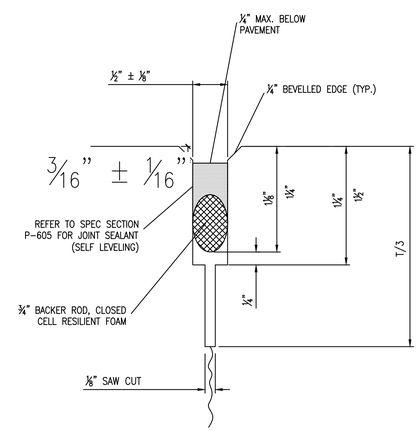

U TYPE 2 - CONTRACTION JOINT
NOT TO SCALE

JDG
BOSCHULTE ARCHITECTURE
BUILDTEC

AGENCY:
VIRGIN ISLANDS
DEPARTMENT OF PUBLIC WORKS
6 Susannaberg
Cruz Bay, VI 00830
phone: (340) 776-6346
website: www.dpw.vi.gov

ARCHITECT:
BOSCHULTE ARCHITECTURE, LLC
PO Box 303100
St. Thomas, VI 00803
41-42 Kongens Gade
St. Thomas, VI 00802
phone: (340) 775-2205
e-mail: info@boschulte.com
website: www.boschulte.com

CIVIL ENGINEER:
BUILDTEC, LLC
PO Box 5000
Christiansted, VI 00823
7-1 Bonne Esperance
Christiansted, VI 00820
phone: (340)513-9918
e-mail: dcartwright@buildtecengi.com

PROFESSIONAL ENGINEER
DAMIAN CARTWRIGHT
28851-18
VIRGIN ISLANDS

STJ MAINTENANCE BUILDING
FOR
V.I. DEPT. OF PUBLIC WORKS
6 SUSANNABERG
CRUZ BAY, VI 00830

PROGRESS SET

No.	Description	Date
1	100% PERMIT SET	07/14/23

REVISIONS

No.	Description	Date

Project number

Date	12/20/2022
Drawn by	DC
Checked by	DC

PAVING, GRADING & DRAINAGE DETAILS

C009

Scale: AS SHOWN

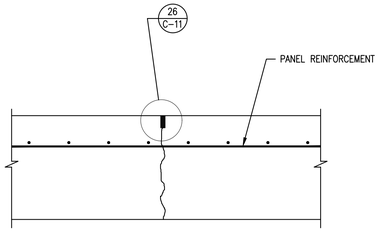

V TYPE D - DUMMY TRANSVERSE CONTRACTION JOINT
NOT TO SCALE

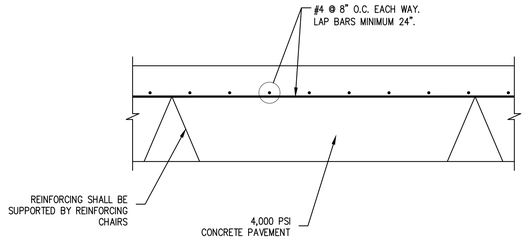

BB REINFORCED CONCRETE PAVEMENT SECTION
NOT TO SCALE

MATERIAL SCHEDULE			
ITEM	SIZE	STANDARD	REMARKS
DOWELS	1 1/4 INCH DIA x 18 INCHES LONG @ 12 INCHES O.C.	ASTM A 615 GRADE 60	EPOXY COATED, INCLUDING ENDS, AASHTO M254
REINFORCED SLABS	#4 REBAR @ 8" O.C. EACH WAY	ASTM A 615 GRADE 60	USE 24 INCH OVERLAP
EXPANSION BOARD	1 INCH WIDTH x DEPTH REQUIRED	ASTM D 1751	USE REMOVABLE CAP FOR JOINT SEAL
DOWEL EPOXY	AS REQUIRED	ASTM C 881, TYPE IV, GRADE 3	CLASS C FOR INSTALLATION ABOVE 60 F CLASS B FOR INSTALLATION 40 F TO 60 F CLASS A FOR INSTALLATION BELOW 40 F
SILICONE SEALANT	SEE DETAILS	ASTM D 5893	TOOLED

DD MATERIAL SCHEDULE
NOT TO SCALE

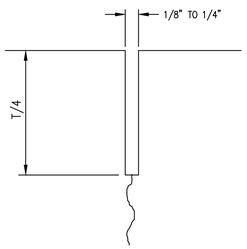

Y INLET SAWCUT DETAIL FOR CONSTRUCTION JOINTS
NOT TO SCALE

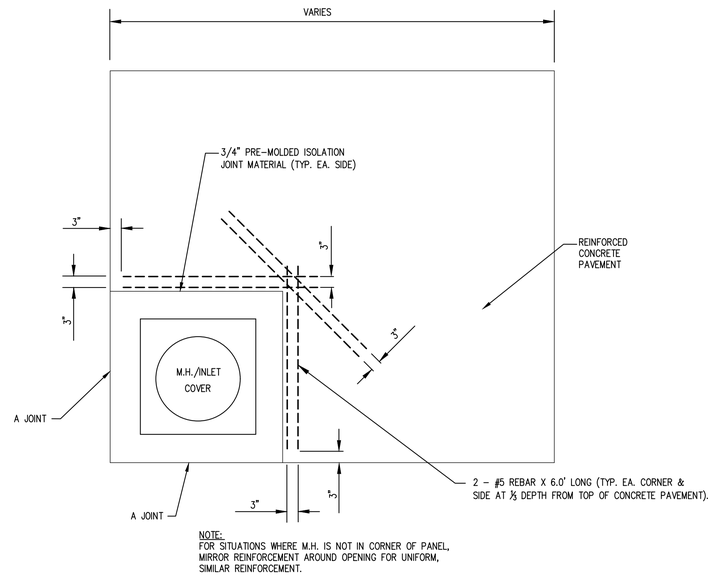

NOTE:
FOR SITUATIONS WHERE M.H. IS NOT IN CORNER OF PANEL,
MIRROR REINFORCEMENT AROUND OPENING FOR UNIFORM,
SIMILAR REINFORCEMENT.

X REINFORCING STEEL LAYOUT IN PAVEMENT
SURROUNDING INLETS/MANHOLES DETAIL
NOT TO SCALE

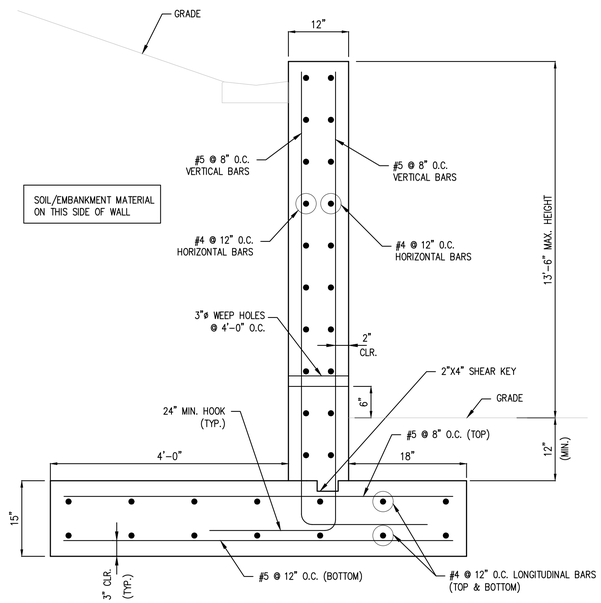

EE RETAINING WALL DETAIL
NOT TO SCALE

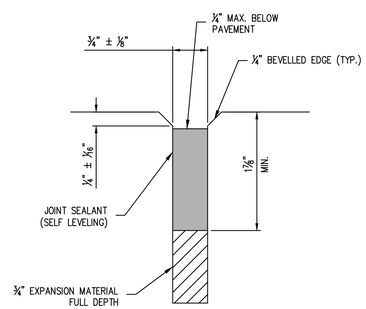

AA EXPANSION/ISOLATION JOINT DETAIL
NOT TO SCALE

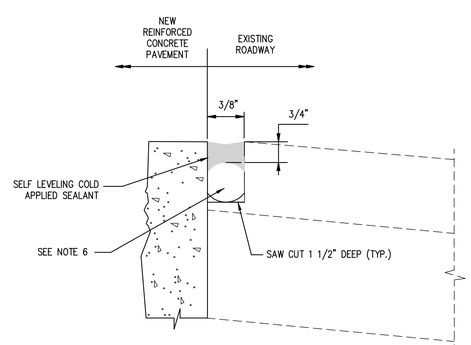

CC ASPHALT/CONCRETE PAVEMENT JOINT DETAIL
NOT TO SCALE

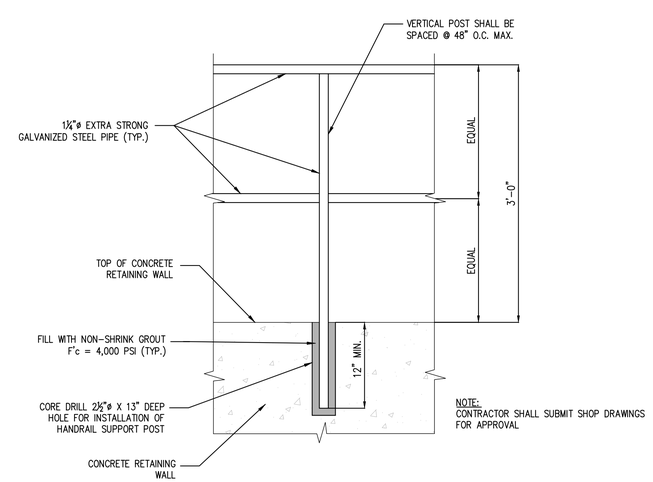

NOTE:
CONTRACTOR SHALL SUBMIT SHOP DRAWINGS
FOR APPROVAL

FF RAILING DETAIL
NOT TO SCALE

JDG
BOSCHULTE ARCHITECTURE
BUILDTEC

AGENCY:
VIRGIN ISLANDS
DEPARTMENT OF PUBLIC WORKS
6 Susannaberg
Cruz Bay, VI 00830
phone: (340) 776-6346
website: www.dpw.vi.gov

ARCHITECT:
BOSCHULTE ARCHITECTURE, LLC
PO Box 303100
St. Thomas, VI00803
41-42 Kongens Gade
St. Thomas, VI 00802
phone: (340) 777-7505
e-mail: info@boschulte.com
website: www.boschulte.com

CIVIL ENGINEER:
BUILDTEC, LLC
PO Box 5000
Christiansted, VI 00823
7-1 Bonne Esperance
Christiansted, VI 00820
phone: (340)513-6918
e-mail: dcartwright@buildtecvi.com

PROFESSIONAL ENGINEER
DAMIAN CARTWRIGHT
28851-1B
VIRGIN ISLANDS

STJ MAINTENANCE BUILDING FOR V.I. DEPT. OF PUBLIC WORKS 6 SUSANNABERG CRUZ BAY, VI 00830

PROGRESS SET

No.	Description	Date
1	100% PERMIT SET	07/14/23

REVISIONS

No.	Description	Date

Project number	
Date	12/20/2022
Drawn by	DC
Checked by	DC

PAVING, GRADING & DRAINAGE DETAILS

C010

Scale: AS SHOWN

1 - GRATES/SOLID COVER SHALL BE DUCTILE IRON PER ASTM A536 GRADE 70-50-05, WITH THE EXCEPTION OF THE BRONZE GRATE.
2 - CUSTOM DRAIN BASIN TO BE CUSTOM MANUFACTURED ACCORDING TO PLAN DETAILS. RISERS ARE NEEDED FOR BASINS OVER 84" DUE TO SHIPPING RESTRICTIONS. SEE DETAIL HH/C011.
3 - STANDARD DRAIN BASIN HAS FIXED ADAPTER LOCATIONS OF 0° & 180°. CUSTOM DRAIN BASIN ADAPTERS CAN BE MOUNTED ON ANY ANGLE 0° TO 360°. TO DETERMINE MINIMUM ANGLE BETWEEN ADAPTERS SEE DETAIL II/C011.
4 - DRAINAGE CONNECTION STUB JOINT TIGHTNESS SHALL CONFORM TO ASTM D3212 FOR CORRUGATED HDPE (ADS N-12/HANCOR DUAL WALL) & PVC SEWER (4" -10").

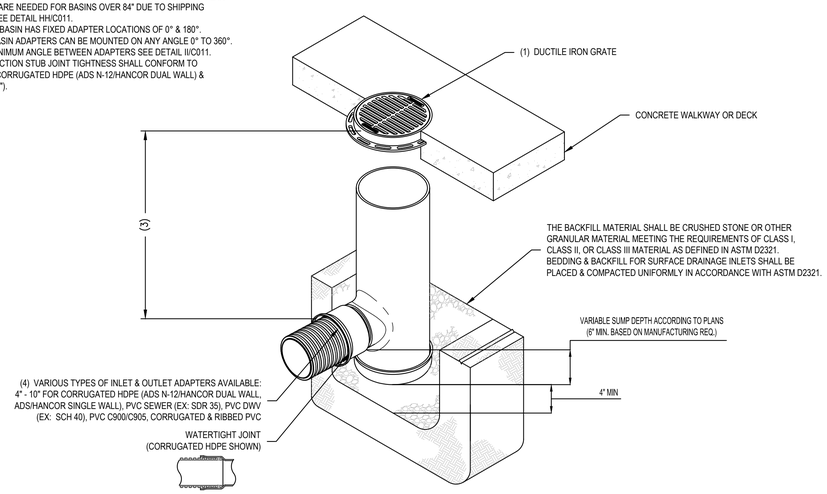

GG — ADS NYLOPLAST OR APPROVED EQUAL 10" AREA DRAIN BASIN

NOT TO SCALE

ADAPTER SIZE	8" BASIN	10" BASIN	12" BASIN	15" BASIN	18" BASIN	24" BASIN	30" BASIN	36" BASIN
4" - 4"	70°	55°	50°	42°	35°	25°	24°	20°
4" - 6"	75°	70°	55°	47°	40°	29°	25°	24°
4" - 8"	100°	80°	65°	55°	45°	35°	28°	27°
4" - 10"	-	95°	75°	62°	52°	40°	32°	30°
4" - 12"	-	-	85°	70°	55°	45°	40°	33°
4" - 15"	-	-	-	80°	65°	51°	44°	38°
4" - 18"	-	-	-	-	76°	60°	50°	44°
4" - 24"	-	-	-	-	-	75°	62°	55°
4" - 30"	-	-	-	-	-	-	75°	73°
4" - 36"	-	-	-	-	-	-	-	74°
6" - 6"	90°	75°	65°	55°	44°	33°	30°	27°
6" - 8"	115°	85°	75°	63°	51°	39°	34°	30°
6" - 10"		105°	85°	70°	55°	43°	38°	33°
6" - 12"	-	-	95°	75°	63°	48°	45°	36°
6" - 15"	-	-	-	86°	72°	56°	48°	41°
6" - 18"	-	-	-	-	84°	63°	55°	47°
6" - 24"	-	-	-	-	-	77°	66°	52°
6" - 30"	-	-	-	-	-	-	75°	76°
6" - 36"	-	-	-	-	-	-	-	76°
8" - 8"	165°	90°	80°	70°	55°	44°	35°	33°
8" - 10"	-	115°	88°	76°	63°	48°	45°	36°
8" - 12"	-	-	102°	83°	70°	52°	48°	40°
8" - 15"	-	-	-	95°	78°	60°	55°	44°
8" - 18"	-	-	-	-	90°	70°	60°	50°
8" - 24"	-	-	-	-	-	82°	70°	62°
8" - 30"	-	-	-	-	-	-	80°	69°
8" - 36"	-	-	-	-	-	-	-	75°
10" - 10"	-	160°	90°	82°	70°	53°	48°	40°
10" - 12"	-	-	115°	85°	75°	58°	50°	43°
10" - 15"	-	-	-	103°	85°	65°	58°	47°
10" - 18"	-	-	-	-	97°	72°	65°	53°
10" - 24"	-	-	-	-	-	88°	75°	65°
10" - 30"	-	-	-	-	-	-	85°	72°
10" - 36"	-	-	-	-	-	-	-	84°
12" - 12"	-	-	150°	90°	82°	64°	56°	46°
12" - 15"	-	-	-	112°	87°	69°	60°	51°
12" - 18"	-	-	-	-	102°	78°	68°	57°
12" - 24"	-	-	-	-		92°	80°	68°
12" - 30"	-	-	-	-	-	-	90°	76°
12" - 36"	-	-	-	-	-	-	-	86°
15" - 15"	-	-	-	150°	90°	77°	69°	55°
15" - 18"	-	-	-	-	110°	84°	75°	61°
15" - 24"	-	-	-	-	-	98°	85°	72°
15" - 30"	-	-	-	-	-	-	96°	85°
15" - 36"	-	-	-	-	-	-	-	94°
18" - 18"	-	-	-	-	150°	90°	78°	67°
18" - 24"	-	-	-	-	-	108°	88°	75°
18" - 30"	-	-	-	-	-	-	100°	87°
18" - 36"	-	-	-	-	-	-	-	100°
24" - 24"	-	-	-	-	-	150°	90°	85°
24" - 30"	-	-	-	-	-	-	115°	99°
24" - 36"	-	-	-	-	-	-	-	112°
30" - 30"	-	-	-	-	-	-	150°	116°
30" - 36"	-	-	-	-	-	-	-	134°
36" - 36"	-	-	-	-	-	-	-	165°

II — ADS NYLOPLAST OR APPROVED EQUAL 8" - 36" MINIMUM ANGLE BETWEEN ADAPTERS

NOT TO SCALE

1. NYLOPLAST RISER JOINTS SHALL BE FIELD INSTALLED USING THE GUIDELINES OUTLINED IN ASTM D2855.
2. PVC CEMENT USED SHALL MEET THE REQUIREMENTS OF ASTM D2564.
3. PVC PRIMER USED SHALL MEET THE REQUIREMENTS OF ASTM F656.

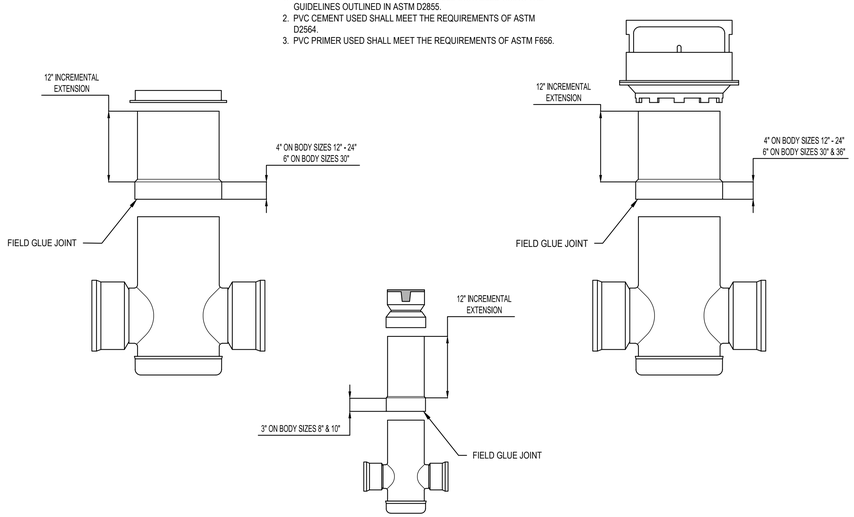

HH — ADS NYLOPLAST OR APPROVED EQUAL 8" - 36" RISER EXTENSION

NOT TO SCALE

JDG
BOSCHULTE ARCHITECTURE
BUILDTEC

AGENCY:
VIRGIN ISLANDS
DEPARTMENT OF PUBLIC WORKS
6 Susannaberg
Cruz Bay, VI 00830
phone: (340) 776-6346
website: www.dpw.vi.gov

ARCHITECT:
BOSCHULTE ARCHITECTURE, LLC
PO Box 303100
St. Thomas, VI00803
41-42 Kongens Gade
St. Thomas, VI 00802
phone: (340) 776-1205
e-mail: info@boschulte.com
website: www.boschulte.com

CIVIL ENGINEER:
BUILDTEC, LLC
Bryan Wade Walk
Christiansted, VI 00823
7-1 Bonne Esperance
Christiansted, VI 00820
phone: (340)513-9918
e-mail: dcartwright@buildtecvi.com

PROFESSIONAL ENGINEER
DAMIAN CARTWRIGHT
26851 - 1B
VIRGIN ISLANDS

STJ MAINTENANCE BUILDING
FOR
V.I. DEPT. OF PUBLIC WORKS
6 SUSANNABERG
CRUZ BAY, VI 00830

PROGRESS SET

No.	Description	Date
1	100% PERMIT SET	07/14/23

REVISIONS

No.	Description	Date

Project number	
Date	12/20/2022
Drawn by	DC
Checked by	DC

PAVING, GRADING & DRAINAGE DETAILS

C011

Scale: AS SHOWN

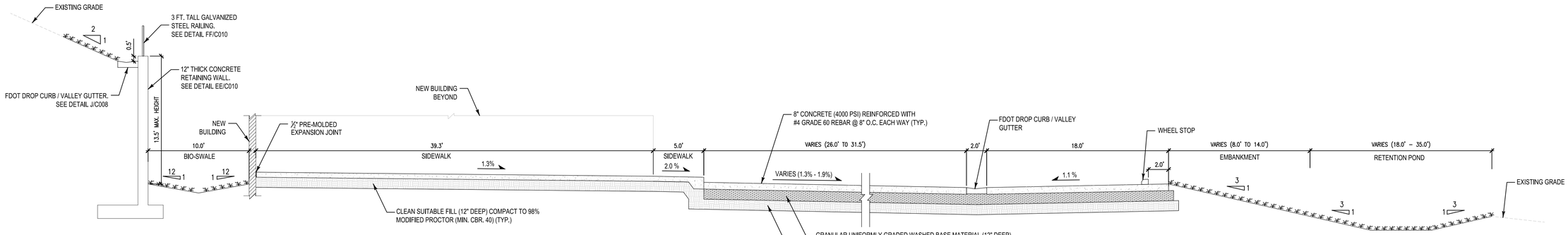

TYPICAL SECTION 1
N.T.S.

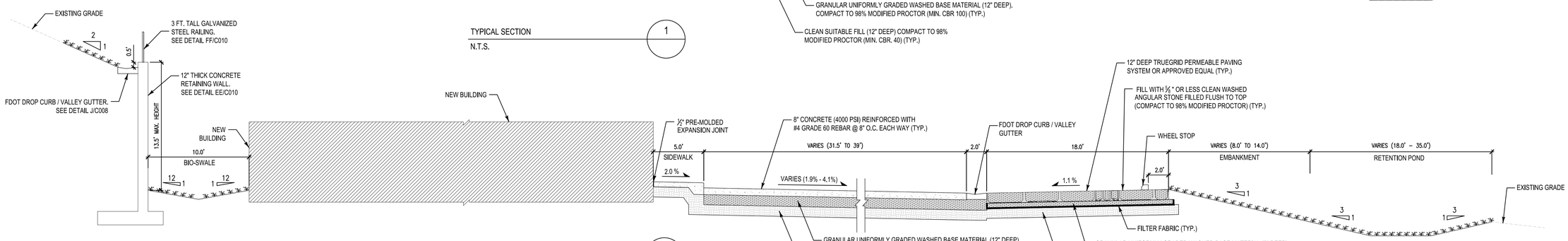

TYPICAL SECTION 2
N.T.S.

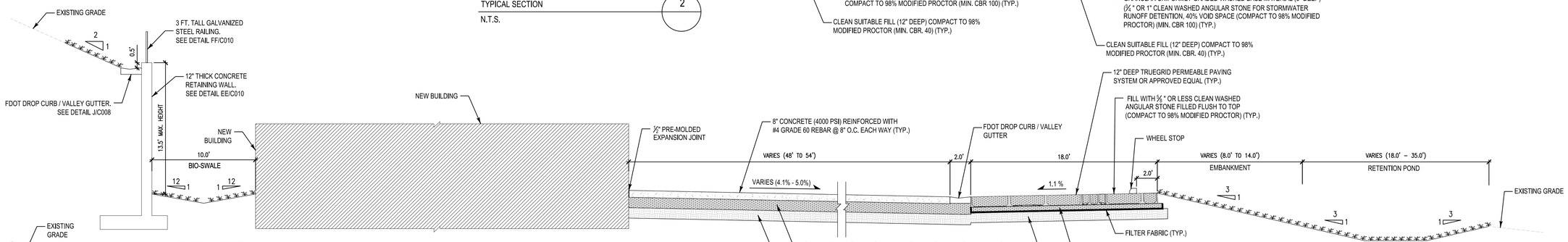

TYPICAL SECTION 3
N.T.S.

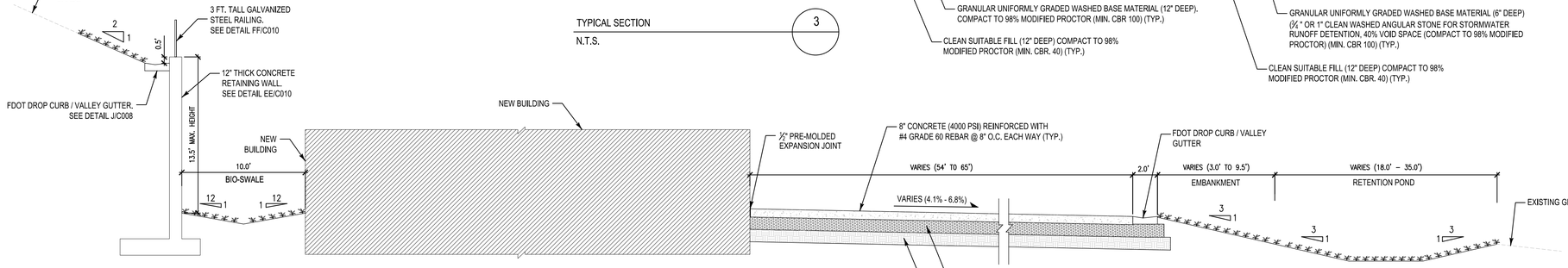

TYPICAL SECTION 4
N.T.S.

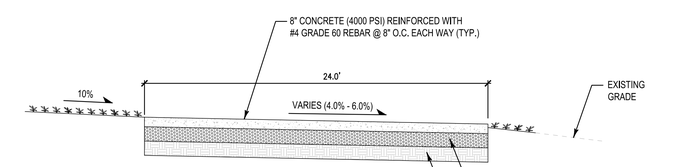

TYPICAL SECTION 5
N.T.S.

JDG
BOSCHULTE ARCHITECTURE
BUILDTEC

AGENCY:
VIRGIN ISLANDS
DEPARTMENT OF PUBLIC WORKS
6 Susannaberg
Cruz Bay, VI 00830
phone: (340) 776-6346
website: www.dpw.vi.gov

ARCHITECT:
BOSCHULTE ARCHITECTURE, LLC
PO Box 303100
St. Thomas, VI 00803
41-42 Kongens Gade
St. Thomas, VI 00802
phone: (340) 776-1505
e-mail: info@boschulte.com
website: www.boschulte.com

CIVIL ENGINEER:
BUILDTEC, LLC
PO Box 24849
Christiansted, VI 00823
7-1 Bonne Esperance
Christiansted, VI 00820
phone: (340)513-9918
e-mail: dcartwright@buildtecvi.com

PROFESSIONAL ENGINEER
DAMIAN CARTWRIGHT
28851 - 1B
VIRGIN ISLANDS

STJ MAINTENANCE BUILDING FOR V.I. DEPT. OF PUBLIC WORKS 6 SUSANNABERG CRUZ BAY, VI 00830

PROGRESS SET

No.	Description	Date
1	100% PERMIT SET	07/14/23

REVISIONS

No.	Description	Date

Project number	
Date	12/20/2022
Drawn by	DC
Checked by	DC

TYPICAL SECTIONS

C012

Scale: AS SHOWN

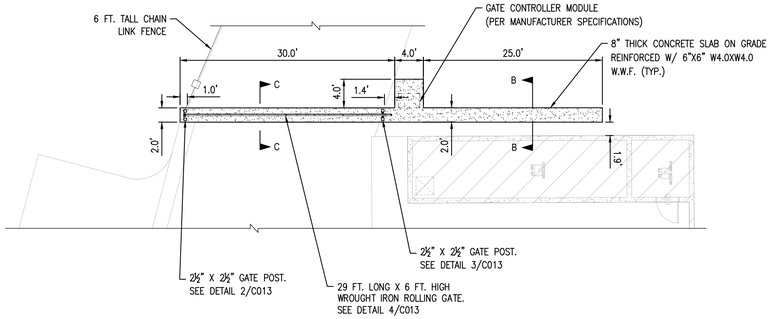

1 GATE - PLAN VIEW
NOT TO SCALE

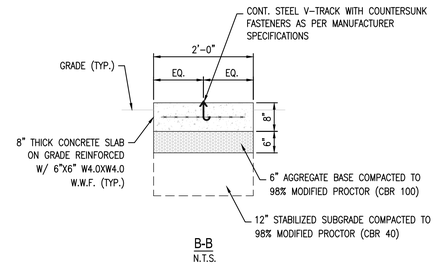

B-B
N.T.S.

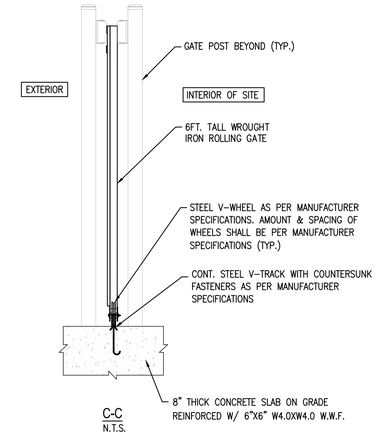

C-C
N.T.S.

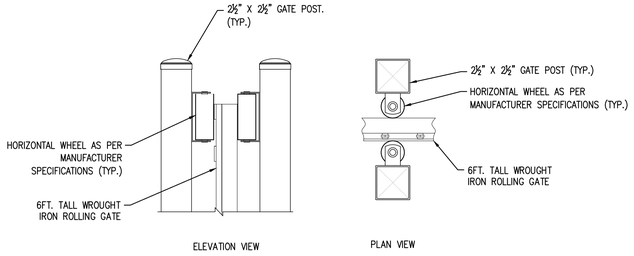

2 DETAIL - ENTRY ROLLING GATE
NOT TO SCALE

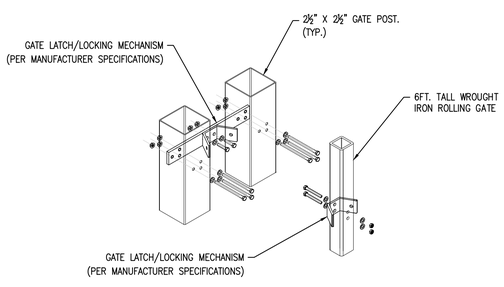

3 DETAIL - ENTRY ROLLING GATE
NOT TO SCALE

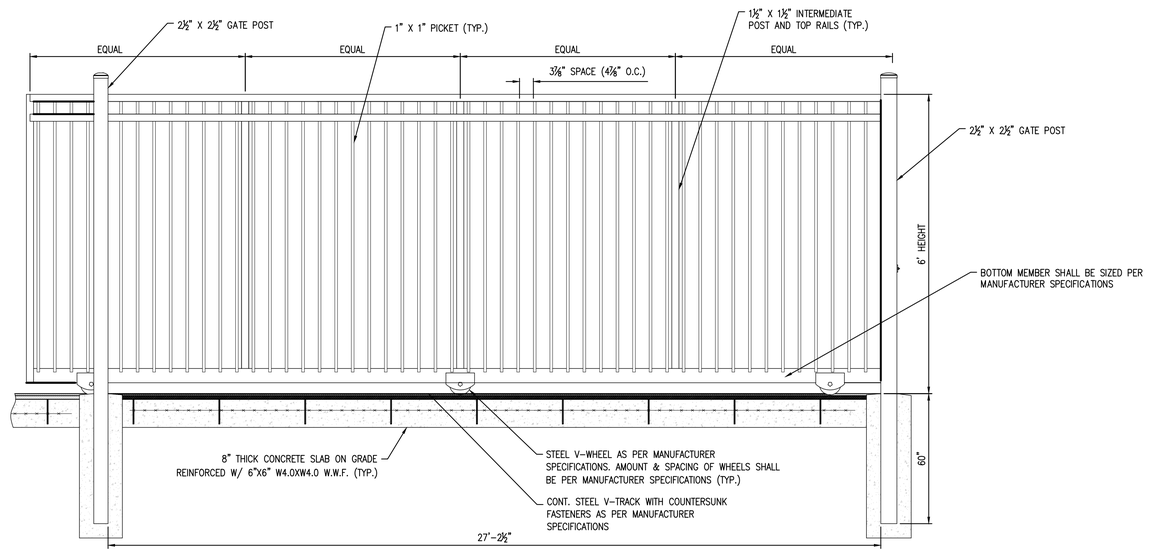

4 WROUGHT IRON ENTRY ROLLING GATE - ELEVATION VIEW
NOT TO SCALE

GENERAL NOTES:

1. WROUGHT IRON GATE SHALL BE GALVANIZED STEEL AND FACTORY PAINTED BLACK.
2. ALL FENCE POST SHALL BE GALVANIZED STEEL AND FACTORY PAINTED BLACK.
3. ALL FENCING SHALL BE 6 FT. HIGH WITH NO BARB WIRE.
4. ALL CHAIN LINK FENCE MESH SHALL BE FACTORY VINYL COATED, BLACK COLOR.
5. ALL FENCING DETAILS PROVIDED ARE FOR REFERENCE ONLY. CONTRACTOR SHALL SUBMIT MANUFACTURER SPECIFIC SHOP DRAWINGS OF FENCING FOR APPROVAL MEETING THE MINIMUM REQUIREMENTS AS DETAILED ON THIS PLAN SHEET.
6. ALL DIMENSIONS, SIZES, GAUGES, WEIGHTS OR THICKNESSES SHOWN ARE THE MINIMUM ACCEPTABLE, UNLESS OTHERWISE INDICATED.
7. CONCRETE SHALL BE OF A COMMERCIAL GRADE WITH A MINIMUM 28 DAY STRENGTH OF 2500 P.S.I.. FOOTING TOPS SHALL BE 1" MINIMUM ABOVE GROUND AT THE POST, AND TROWEL FINISHED TO SLOPE AWAY FROM POST.
8. NO GAPS / OPENINGS GREATER THAN 4 INCHES IS ALLOWED BENEATH FENCE
9. GROUND RODS SHALL BE INSTALLED AT 500' MAXIMUM INTERVALS, INCIDENTAL TO FENCE COST. EACH SECTION OF FENCE SEPARATED BY NON-METALLIC CONNECTORS, BUILDINGS OR OTHER OPENINGS SHALL HAVE A MINIMUM OF ONE GROUND ROD. EACH GATE LEAF FRAME SHALL BE CONNECTED TO THE GATE POST BY BRAIDED FLEXIBLE COPPER STRAP. EACH GATE POST SHALL BE GROUNDED. GROUND RODS SHALL BE 5/8" X 8' MIN. SIZE, COPPER OR COPPER CLAD GROUND CABLE SHALL BE NO. 6 AWG MIN. BARE STRANDED COPPER WIRE, FOR FENCES GROUNDING SHALL BE AS DETAILED. CONNECTIONS TO FENCE AND RODS SHALL BE MADE WITH SUITABLE NON-CORROSIVE METAL CLAMPS, LUGS OR CONNECTORS.
10. FENCE LINES SHALL BE CLEARED OF ALL OBSTRUCTIONS AND SMOOTH GRADED TO THE GENERAL CONTOUR OF THE ADJACENT GROUND FOR A MINIMUM WIDTH OF 10' EACH SIDE OF LINE. STUMPS AND ROOTS NOT INTERFERING WITH FENCE CONSTRUCTION, MAY BE CHIPPED TO GROUND LEVEL.
11. THE FENCE SHALL BE CONSTRUCTED VERTICAL, STRAIGHT AND TRUE TO LINE, THE LONGITUDINAL GRADIENT SHALL PARALLEL THE GENERAL SLOPE OF THE GROUND

JDG
BOSCHULTE ARCHITECTURE
BUILDTEC

AGENCY:
VIRGIN ISLANDS
DEPARTMENT OF PUBLIC WORKS
6 Susannaberg
Cruz Bay, VI 00830
phone: (340) 776-6346
website: www.dpw.vi.gov

ARCHITECT:
BOSCHULTE ARCHITECTURE, LLC
PO Box 303100
St. Thomas, VI00803
41-42 Kongens Gade
St. Thomas, VI 00802
phone: (340) 777-2305
e-mail: info@boschulte.com
website: www.boschulte.com

CIVIL ENGINEER:
BUILDTEC, LLC
PO Box 1486
Christiansted, VI 00823
7-1 Bonne Esperance
Christiansted, VI 00820
phone: (340)513-6918
e-mail: dcartwright@buildtecengi.com

PROFESSIONAL ENGINEER
DAMIAN CARTWRIGHT
28851-18
VIRGIN ISLANDS

STJ MAINTENANCE BUILDING FOR V.I. DEPT. OF PUBLIC WORKS 6 SUSANNABERG CRUZ BAY, VI 00830

PROGRESS SET

No.	Description	Date
1	100% PERMIT SET	07/14/23

REVISIONS

No.	Description	Date

Project number	
Date	12/20/2022
Drawn by	DC
Checked by	DC

GATE & FENCE DETAILS

C013

Scale: AS SHOWN

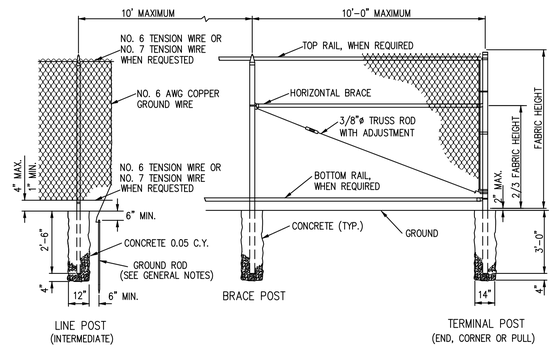

5 CHAIN LINK FENCE - BRACE SECTION

NOT TO SCALE

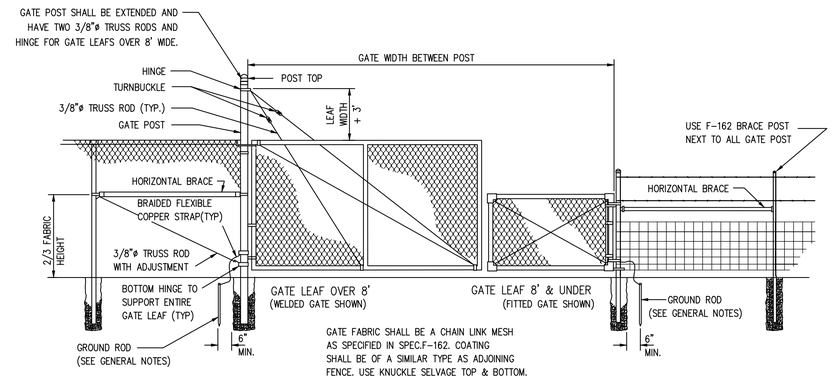

GATE FABRIC SHALL BE A CHAIN LINK MESH AS SPECIFIED IN SPEC.F-162. COATING SHALL BE OF A SIMILAR TYPE AS ADJOINING FENCE. USE KNUCKLE SELVAGE TOP & BOTTOM.

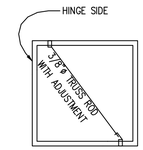

8' WIDE OR LESS
(TRUSS ROD NOT REQUIRED FOR LEAFS 5' AND UNDER)

WELDED CONNECTIONS

GATE FRAMES

GATE NOTES

1. GATE HINGES AND FITTINGS SHALL BE HEAVY PATTERN AND EASILY OPERATED BY ONE PERSON. BOTTOM HINGE SHALL BE BALL AND SOCKET, OR EQUAL, AND CAPABLE OF SUPPORTING ENTIRE WEIGHT OF GATE LEAF.
2. GATE LEAFS SHALL BE INSTALLED AS DETAILED ON THE CONTRACT PLANS
3. WELDS ON STEEL FRAMES SHALL BE GROUND SMOOTH THROUGHLY CLEANED AND COVERED WITH ALUMINUM OR ZINC BASE PAINT.
4. WHEN BARBED WIRE EXTENSION ARMS ARE SPECIFIED FOR FENCE. THE GATE POSTS SHALL BE EXTENDED 12" MINIMUM ABOVE THE TOP OF THE FENCE FABRIC FOR TERMINATING THE BARBED WIRE.

GATE FRAME DIMENSIONS & WEIGHTS

DESCRIPTION	SECTION	STEEL FRAME OUTER DIMENSION (INCHES)	STEEL FRAME WEIGHT (LB./FT.)
FABRIC HEIGHT 6' & LESS & LEAF WIDTH 8' OR LESS	○	1.66	2.27
	□	1.50	1.90
FABRIC HEIGHT OVER 6' AND/ OR ALL LEAF WIDTHS OVER 8'	○	1.90	2.72
	□	2.00	2.60
INTERIOR BRACING	○	1.66	2.27
	□	1.50	1.90

6 CHAIN LINK FENCE - GATE DETAILS AND SPECIFICATIONS

NOT TO SCALE

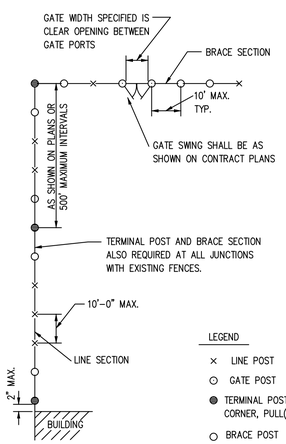

7 TYPICAL FENCE LAYOUT

NOT TO SCALE

CHAIN LINK FENCE MEMBERS DIMENSIONS & WEIGHTS
(FED. SPEC. RR-F-00191)

DESCRIPTION	SECTION	STEEL FRAME OUTSIDE DIMENSIONS (INCHES)	STEEL FRAME WEIGHT (LBS./FT.)
CORNER, BRACE, END & PULL POSTS	○	2.375	3.65
FABRIC HEIGHTS 6' & LESS	□	2.00	3.65
FABRIC HEIGHTS OVER 6'	○	2.875	5.79
	□	2.50	5.70
ALL HEIGHTS	ROLL FORM	3.5 x 3.5	5.10
GATE POSTS	○	2.875	5.79
GATE LEAF WIDTH 6' AND LESS	□	2.50	5.70
	ROLL FORM	3.5 x 3.5	5.10
GATE LEAF WIDTH OVER 6' THRU 13'	○	4.00	9.10
GATE LEAF WIDTH OVER 13' THRU 18'	○	6.625	18.97
GATE LEAF WIDTH OVER 18' THRU 23'	○	8.625	24.70
LINE POSTS FABRIC HEIGHTS 6' & LESS	○	1.90	2.72
FABRIC HEIGHTS OVER 6'	○	2.375	3.65
FABRIC HEIGHTS 8' AND LESS	⊢	1.875x1.625 x0.113	2.70
FABRIC HEIGHTS OVER 8'	⊢	2.25x1.95 x0.143	4.10
RAILS & BRACES	○	1.660	1.806
	ROLL FORM	1.625x1.250	1.35

NOTES : CHAIN LINK FENCE

1. FABRIC: 2"x2" NO.9 GAUGE WIRE MESH PER ASTM A392, CLASS II (GALVANIZED); FED. SPEC. RR-F-191/1 (POLYVINYL-CHLORIDE COATED); UNLESS OTHERWSE SPECIFIED ON CONTRACT PLANS.
2. SELVAGE, RAILS & TENSION WIRES: FENCING SHALL HAVE KNUCKLE SELVAGE (TOP & BOTTOM) WITH TOP RAIL AND BOTTOM TENSION WIRE.
3. FABRIC FASTENERS: MINIMUM 3/16"x3/4" STRETCHER BAR BANDED TO TERMINAL POSTS, OR INTEGRAL FABRIC FITTINGS ON TERMINAL POSTS. USE NO.6 WIRE CLIPS FOR LINE POSTS AND NO.9 WIRE CLIPS FOR BRACES, RAILS AND TENSION WIRES. ALL FASTENERS SPACED 14" MAX. VERTICALLY, 24" MAX. HORIZONTALLY.
4. COATINGS : ZINC COATINGS ON POSTS, RAILS, GATE FRAMES AND STEEL FITTINGS SHALL AVERAGE 2.0 OZ./s.f PER ASTM A123. NO INDIVIDUAL SPECIMEN SHALL HAVE LESS THAN 1.8 OZ./S.F. IF OTHER TYPES OF COATINGS ARE FURNISHED, THEY SHALL MEET THE APPROPRIATE ASTM OR FEDERAL SPECIFICATION IN NOTE 1.
5. FENCE HEIGHT : THE FABRIC HEIGHT IS THE NORMAL FENCE HEIGHT.

8 CHAIN LINK FENCE - MEMBER SPECIFICATIONS

NOT TO SCALE

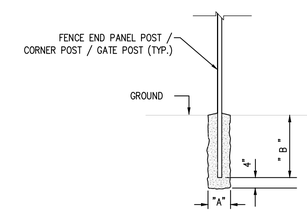

DIMENSIONS	GATE POST (GATE WIDTH – SINGLE LEAF) 6' AND LESS	6' THROUGH 15'	OVER 15'	TERMINAL POST (END, CORNER, OR PULL)	LINE / INTERMEDIATE POST
A	14"	16"	20"	14"	12"
B	48"	54"	60"	36"	30"

9 FENCE POST AND CONCRETE BASE

NOT TO SCALE

JDG
BOSCHULTE ARCHITECTURE
BUILDTEC

AGENCY:
VIRGIN ISLANDS
DEPARTMENT OF PUBLIC WORKS
6 Susannaberg
Cruz Bay, VI 00830
phone: (340) 776-6346
website: www.dpw.vi.gov

ARCHITECT:
BOSCHULTE ARCHITECTURE, LLC
PO Box 303100
St. Thomas, VI00803
41-42 Kongens Gade
St. Thomas, VI 00802
phone: (340) 774-2525
e-mail: info@boschulte.com
website: www.boschulte.com

CIVIL ENGINEER:
BUILDTEC, LLC
PO Box 1486
Christiansted, VI 00823
7-1 Bonne Esperance
Christiansted, VI 00820
phone: (340)513-6918
e-mail: dcartwright@buildtecengr.com

PROFESSIONAL ENGINEER
DAMIAN CARTWRIGHT
28851-18
VIRGIN ISLANDS

STJ MAINTENANCE BUILDING
FOR
V.I. DEPT. OF PUBLIC WORKS
6 SUSANNABERG
CRUZ BAY, VI 00830

PROGRESS SET

No.	Description	Date
1	100% PERMIT SET	07/14/23

REVISIONS

No.	Description	Date

Project number

Date	12/20/2022
Drawn by	DC
Checked by	DC

GATE & FENCE DETAILS

C014

Scale: AS SHOWN

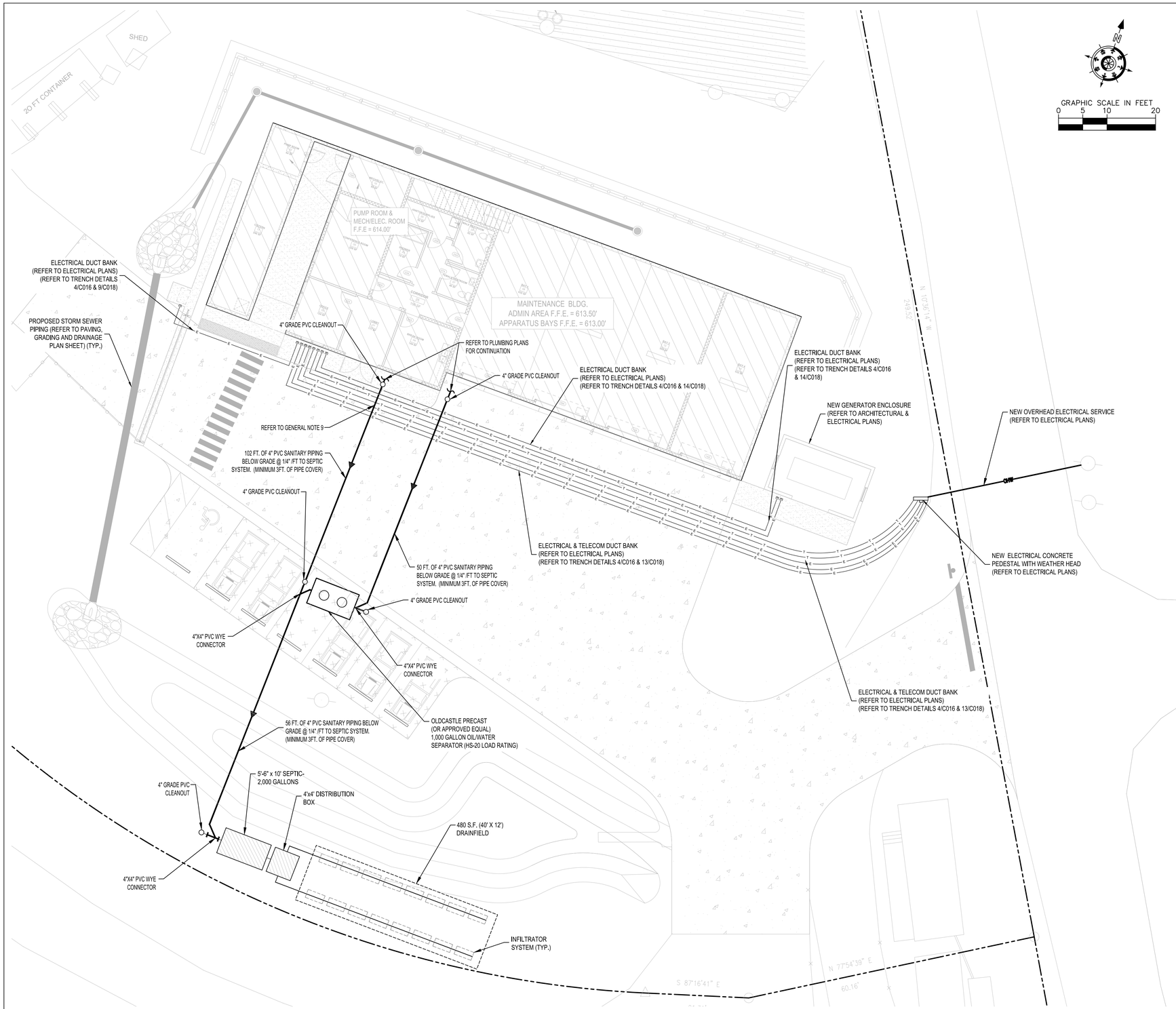

LEGEND

- RIGHT-OF-WAY / PROPERTY LINE
- NEW SANITARY SEWER LATERAL
- NEW TELECOM CONDUITS (REFER TO ELECTRICAL PLANS)
- NEW ELECTRICAL CONDUITS (REFER TO ELECTRICAL PLANS)
- EXISTING OVERHEAD ELECTRIC
- NEW OVERHEAD ELECTRIC

NOTES:

1. COORDINATE THIS PLAN SHEET WITH THE ARCHITECTURAL, STRUCTURAL AND M.E.P. DRAWINGS. NOTIFY ENGINEER OF ANY DISCREPANCIES PRIOR TO PROCEEDING WITH THE WORKS SHOWN ON THESE PLANS
2. COORDINATE THIS SHEET WITH DEMOLITION PLAN SHEET C004, SITE & GEOMETRY PLAN SHEET C005, & PAVING, GRADING & DRAINAGE PLAN SHEET C006
3. COORDINATE THIS PLAN SHEET WITH THE ELECTRICAL / TELECOM DRAWINGS & SPECIFICATIONS. NOTIFY ENGINEER OF ANY DISCREPANCIES PRIOR TO PROCEEDING WITH THE WORKS SHOWN ON THESE PLANS

GENERAL NOTES:

1. ALL PAVED SURFACES, INCLUDING DRIVEWAYS CROSSED BY THE PROPOSED UTILITIES SHALL BE SAW CUT TO PROVIDE A CLEAN TRUE EDGE FOR PAVEMENT REPLACEMENT.
2. THE CONTRACTOR SHALL CONFINE ALL CONSTRUCTION ACTIVITIES TO THE AREA WITHIN THE PROPERTY AND CONSTRUCTION LIMITS UNLESS OTHERWISE APPROVED BY THE OWNER.
3. ROOF DRAINS, FOUNDATION DRAINS, SUMP PUMP DRAINS AND OTHER CLEAN WATER CONNECTIONS TO THE SANITARY SEWER ARE PROHIBITED. NO BUILDING SHALL BE CONNECTED TO A SEWER LATERAL UNTIL THE BUILDING IS UNDER ROOF.
4. ALL MATERIAL, CONSTRUCTION METHODS AND TESTING PROCEDURES SHALL BE IN CONFORMANCE WITH THE WRITTEN SPECIFICATIONS OF THE V.I. WATER & POWER AUTHORITY (VIWAPA) FOR ALL WATER LINE WORK, AND THE V.I. WASTE MANAGEMENT AUTHORITY FOR ALL SANITARY SEWER LINE WORK (VIWMA).
5. THE SOIL TYPES IN THE AREAS OF THE PROPOSED SEWER LINES WERE VISUALLY OBSERVED FOR THE PRESENCE OF CORROSIVE SOILS. THERE WERE NO CORROSIVE SOILS DETECTED. SHOULD IRON PIPES BE PROPOSED IN AN AREA AND CORROSIVE SOILS ENCOUNTERED, THE PIPE SHALL BE PROTECTED BY AN 8 MIL THICK POLYETHYLENE ENCASEMENT MEETING THE REQUIREMENTS OF ANSI A21.5.
6. ALL WATER AND SEWAGE FACILITIES DESIGNED HEREIN SHALL CONFORM TO THE MATERIALS, SPECIFICATIONS, CONSTRUCTION METHODS AND STANDARD DETAILS SPECIFIED BY VIWAPA AND VIWMA, RESPECTIVELY. IN CASE OF CONFLICTS WITH THE PROJECT'S WRITTEN SPECIFICATIONS OR STANDARD DETAILS, THE MORE STRINGENT SHALL APPLY. THE VIWAPA AND VIWMA SHALL MAKE THE FINAL DECISION IN EACH CASE.
7. ALL SERVICES HAVE BEEN DESIGNED AND DRAWN IN ACCORDANCE WITH BASE SITE LAYOUT PLANS AND LAND SURVEY DRAWINGS PROVIDED BY THE OWNER'S REPRESENTATIVE. THE ENGINEER ACCEPTS NO RESPONSIBILITY FOR FIELD ERRORS RESULTING FROM INACCURACIES IN OWNER-PROVIDED SITE PLANS.
8. CONTRACTOR SHALL BEAR RESPONSIBILITY FOR ACCURATE LOCATION OF WATER AND SEWER LINES AND APPURTENANCES. CONTRACTOR SHALL MAINTAIN ACCURATE RECORDS OF LOCATIONS OF ALL SEWER AND WATER DISTRIBUTION LINES, APPURTENANCES, HYDRANTS, CLEANOUTS, JUNCTIONS AND BRANCHES.
9. ELECTRICAL CONDUIT(S) TO CROSS BELOW SANITARY SEWER LATERAL WITH MINIMUM 12" CLEAR SEPARATION.
10. ELECTRICAL CONDUIT(S) TO CROSS BELOW ANY WATER LINES WITH MINIMUM 12" CLEAR SEPARATION.
11. ELECTRICAL CONDUIT(S) TO CROSS ABOVE OR BELOW STORM SEWER LINE WITH MINIMUM 12" CLEAR SEPARATION.

SANITARY SEWER SYSTEM:

1. BUILDING SEWERS SHALL CONNECT TO MAIN GRAVITY SEWER LINES ONLY. BUILDING LINE CONNECTIONS DIRECTLY TO MANHOLES ARE NOT PERMITTED.
2. CONTRACTOR IS RESPONSIBLE FOR LOCATION, REMOVAL AND OR COORDINATION OF EXISTING UTILITIES. THE ENGINEER OF RECORD SHALL BE APPRAISED OF ANY CONFLICTS BETWEEN EXISTING UTILITIES AND THE NEW DESIGN PRIOR TO ANY SITE CORRECTION OF NEW DESIGN BY THE CONTRACTOR.
3. CONTRACTOR SHALL PREPARE AS-BUILT DRAWINGS. FINAL INSPECTION AND APPROVALS WILL NOT BE GRANTED WITHOUT THE SAME.
4. ALL CONSTRUCTION WORKS SHALL BE CARRIED OUT BY COMPETENT CONTRACTORS EXPERIENCED IN THE CONSTRUCTION OF SANITARY SEWAGE WORKS AND ALL MACHINERY INSTALLATION SHALL BE SUPERVISED, TESTED AND/OR CERTIFIED BY THE MANUFACTURER'S REPRESENTATIVE.
5. ALL WORKS SHALL BE OPEN TO INSPECTION BY THE OWNER'S REPRESENTATIVE THROUGHOUT CONSTRUCTION.
6. ALL GRAVITY SANITARY SEWER LINES SHALL BE ASTM D3034 PVC PIPE WITH STANDARD DIMENSION RATIO (SDR) OF 35. SEWER PIPES AND FITTINGS SHALL HAVE BONDED, RESILIENT JOINTS WHICH SHALL RETAIN WATER TIGHTNESS BY COMPRESSION OF THE GASKET MATERIAL AROUND THE ENTIRE PERIPHERY OF THE PIPE.
7. LEAKAGE FOR NEW CONSTRUCTION, OR SYSTEMS THAT HAVE NEVER BEEN COMMISIONED, SHALL BE ZERO. LEAKAGE INWARD OR OUTWARD FROM EXISTING SEWERS SHALL NOT EXCEED 300 GALLONS PER INCH DIAMETER PER MILE PER DAY.
8. THE MINIMUM ALLOWABLE SIZE OF SEWERS OTHER THAN BUILDING CONNECTIONS SHALL BE EIGHT (8) INCHES DIAMETER.
9. THE FOLLOWING MINIMUM GRADES SHALL BE PROVIDED :

4" & 6" DIAMETER SEWER SERVICE LATERALS	2.0%
8" DIAMETER SEWERS	0.40%
10" DIAMETER SEWERS	0.28%
12" DIAMETER SEWERS	0.22%
15" DIAMETER SEWERS	0.15%
18" DIAMETER SEWERS	0.12%
21" DIAMETER SEWERS	0.10%
24" DIAMETER SEWERS	0.08%

10. SEWERS SHALL BE LAID WITH UNIFORM SLOPES.

JDG

BOSCHULTE ARCHITECTURE

BUILDTEC

AGENCY:
VIRGIN ISLANDS
DEPARTMENT OF PUBLIC WORKS
6 Susannaberg
Cruz Bay, VI 00830
phone: (340) 776-6346
website: www.dpw.vi.gov

ARCHITECT:
BOSCHULTE ARCHITECTURE, LLC
PO Box 303100
St. Thomas, VI 00803
41-42 Kongens Gade
St. Thomas, VI 00802
Christiansted, VI 00820
e-mail: info@boschulte.com
website: www.boschulte.com

CIVIL ENGINEER:
BUILDTEC, LLC
PO Box 1486
Christiansted, VI 00823
7-1 Bonne Esperance
Christiansted, VI 00820
phone: (340)513-9918
e-mail: dcartwright@buildtecevg.com

PROFESSIONAL ENGINEER
DAMIAN CARTWRIGHT
28851 - 18
VIRGIN ISLANDS

STJ MAINTENANCE BUILDING FOR V.I. DEPT. OF PUBLIC WORKS 6 SUSANNABERG CRUZ BAY, VI 00830

PROGRESS SET

No.	Description	Date
1	100% PERMIT SET	07/14/23

REVISIONS

No.	Description	Date

Project number	
Date	12/20/2022
Drawn by	DC
Checked by	DC

UTILITY PLAN

C015

Scale: AS SHOWN

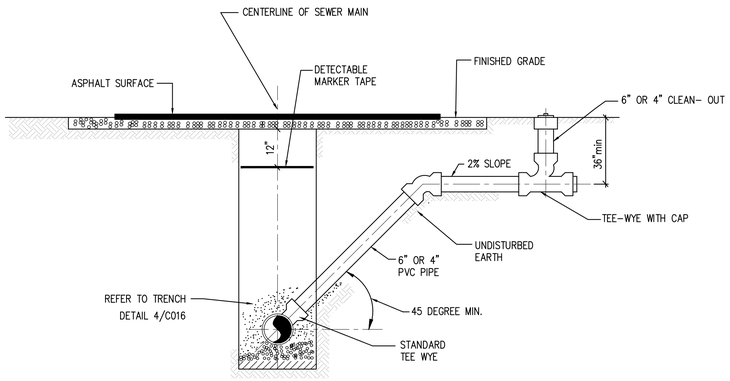

THROUGHLY COMPACT PEA GRAVEL AGAINST UNDISTURBED EARTH,GRAVEL OR CONCRETE ENCASED TO PREVENT MOVEMENT.

1 SANITARY SEWER LATERAL

NOT TO SCALE

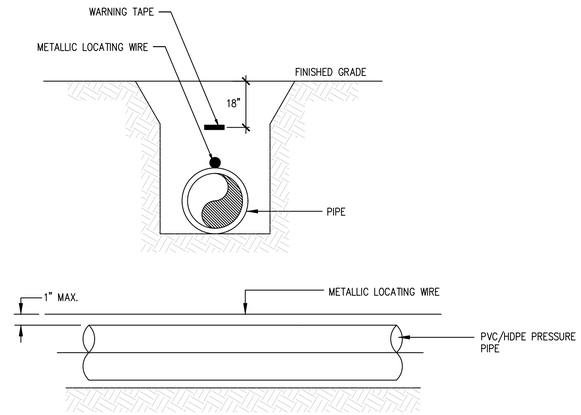

NOTES:

1. PVC/HDPE PRESSURE PIPE SHALL REQUIRE INSULATED METALLIC LOCATING WIRE (14 GAUGE COPPER) CAPABLE OF DETECTION BY A CABLE LOCATOR AND SHALL BE TAPED TO CENTERLINE OF THE PIPE.
2. LOCATING WIRE SHALL TERMINATE AT THE TOP OF EACH VALVE BOX AND BE CAPABLE OF EXTENDING 3" ABOVE TOP OF BOX IN SUCH A MANNER SO AS NOT TO INTERFERE WITH VALVE OPERATION.
3. USE DUCT TAPE OR PLASTIC TIES AS NECESSARY TO HOLD WIRE DIRECTLY ON THE TOP OF THE PIPE.
4. EXTEND METALLIC LOCATING WIRE ALONG STUBBED OUT SERVICE CONNECTIONS
5. WARNING/MARKING TAPE SHALL BE DIRECTLY ABOVE ALL PRESSURE PIPE. TAPE SHALL HAVE 18" COVER

2 PIPE LOCATING WIRE

NOT TO SCALE

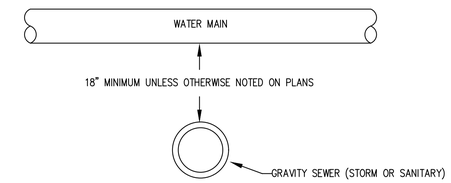

NOTES:

1. A VERTICAL SEPERATION DISTANCE OF A MINIMUM OF 18" MUST BE MAINTAINED.
2. IF MINIMUM VERTICAL SEPERATION IS NOT POSSIBLE THEN THE SEWER MAIN MUST BE ENCASED FOR A DISTANCE 20'-0" CENTERED ON THE POINT OF CROSSING AND SEWER MAIN MUST BE OF WATER QUALITY (i.e. DR. 18 AWWA C900).

3 WATERMAIN CROSSING

NOT TO SCALE

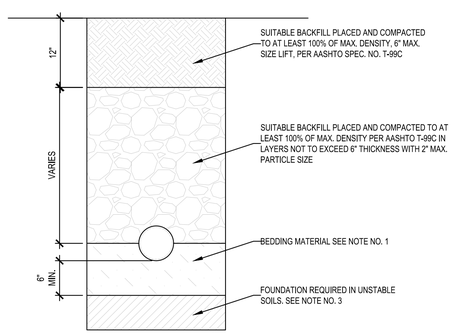

NOTES:

1. UNLESS OTHERWISE SPECIFIED, BEDDING MATERIAL SHALL CONSIST OF SELECT BACKFILL MATERIAL 2" MAXIMUM PARTICLE SIZE, COMPACTED TO AT LEAST 100% OF MAX. DENSITY, 6" LIFTS, PER AASHTO SPEC. NO. T-99C
2. WHERE REQUIRED, SHEETING AND SHORING SHALL BE IN ACCORDANCE WITH OSHA REQUIREMENTS.
3. WHERE UNSTABLE SOILS ARE ENCOUNTERED, INCLUDING PEAT, MUCK OR OTHER ORGANIC SOILS, ELASTIC SILT AND CLAYS, A FOUNDATION IS REQUIRED AS DETERMINED BY THE ENGINEER.

4 TYPICAL TRENCH BACKFILL

NOT TO SCALE

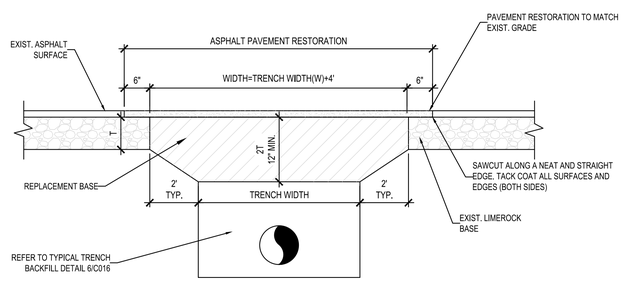

GENERAL NOTES:

1. REPLACED BASE MATERIAL OVER DITCH SHALL BE TWICE THE THICKNESS OF THE ORIGINAL BASE. BUT NOT LESS THAN 12".
2. BASE MATERIAL SHALL BE PLACED IN 6 INCH MAXIMUM LAYERS AND EACH LAYER THOROUGHLY ROLLED OR TAMPED TO 98% OF MAXIMUM DENSITY, PER AASHTO T-180. BASE MATERIAL SHALL HAVE A MINIMUM LBR OF 100.
3. ASPHALTIC CONCRETE PAVEMENT JOINTS SHALL BE MECHANICALLY SAWED.
4. SURFACE TREATED PAVEMENT JOINTS SHALL BE LAPPED AND FEATHERED. PAVEMENT MATERIAL SHALL BE FDOT TYPE SP-9.5 (FINE MIX) ASPHALTIC CONCRETE STRUCTURAL COURSE (1" THICK), MATCH EXISTING GRADES AT LIMIT OF SAWCUT.
5. UPON COMPLETION OF TRENCHING AND TRENCH/PAVEMENT RESTORATION FOR THE ENTIRE PROJECT, RESURFACE ENTIRE ROADWAY WIDTH WITH FDOT TYPE SP-9.5 (FINE MIX) ASPHALTIC CONCRETE SURFACE COURSE OVERLAY (1" MINIMUM THICKNESS).
6. BID PRICES FOR PIPE AND/OR FRENCH DRAIN SHALL INCLUDE PAVEMENT RESTORATION TO MATCH EXISTING GRADES. CONTRACTOR SHALL NOT LEAVE MORE THAN 1,000-FEET OF EXPOSED LIMEROCK BASE AT ANY TIME DURING THE TRENCH/PAVEMENT RESTORATION PROCESS. ONLY THE FDOT TYPE SP-9.5 (FINE MIX) ASPHALTIC CONCRETE SURFACE COURSE OVERLAY WILL BE PAID SEPARATELY.
7. WHEN TRENCHING OUTSIDE THE PAVEMENT AREA, ASPHALT AND BASE MATERIAL REFERENCED IN GENERAL NOTES 1-5 ARE NOT REQUIRED. RESTORE OR REPLACE ALL PUBLIC OR PRIVATE PROPERTY TO A CONDITION AT LEAST EQUAL TO THAT EXISTING IMMEDIATELY PRIOR TO COMMENCEMENT OF CONSTRUCTION. ALL IMPACTED AREAS SHALL BE COMPACTED TO 95% DENSITY IN 6-INCH MAXIMUM LIFTS.
8. CONTRACTOR SHALL REFER TO GEOTECHNICAL REPORT FOR ADDITIONAL SOILS INFORMATION TO UNDERSTAND EXISTING CONDITIONS.

5 PAVEMENT RESTORATION

NOT TO SCALE

JDG

BOSCHULTE ARCHITECTURE

BUILDTEC

AGENCY:
VIRGIN ISLANDS
DEPARTMENT OF PUBLIC WORKS
6 Susannaberg
C-Bay, VI 00830
phone: (340) 776-6346
website: www.dpw.vi.gov

ARCHITECT:
BOSCHULTE ARCHITECTURE, LLC
PO Box 303100
St. Thomas, VI00803
41-42 Kongens Gade
St. Thomas, VI 00802
phone: (340) 777-0255
e-mail: info@boschulte.com
website: www.boschulte.com

CIVIL ENGINEER:
BUILDTEC, LLC
PO Box 1486
Christiansted, VI 00823
7-1 Bonne Esperance
Christiansted, VI 00820
phone: (340)513-9918
e-mail: dcartwright@buildteceng.com

PROFESSIONAL ENGINEER
DAMIAN CARTWRIGHT
28851-1B
VIRGIN ISLANDS

STJ MAINTENANCE BUILDING FOR V.I. DEPT. OF PUBLIC WORKS 6 SUSANNABERG CRUZ BAY, VI 00830

PROGRESS SET

No.	Description	Date
1	100% PERMIT SET	07/14/23

REVISIONS

No.	Description	Date

Project number	
Date	12/20/2022
Drawn by	DC
Checked by	DC

UTILITY DETAILS

C016

Scale: AS SHOWN

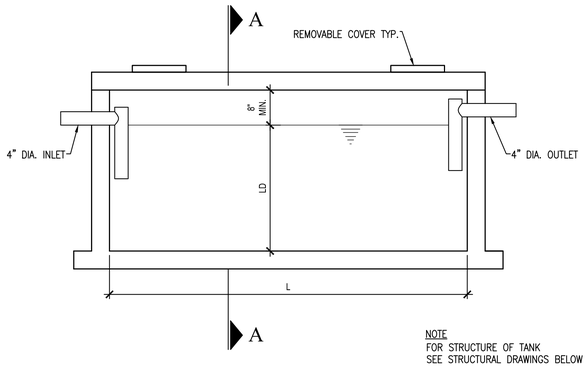

6 SEPTIC TANK DETAILS
NOT TO SCALE

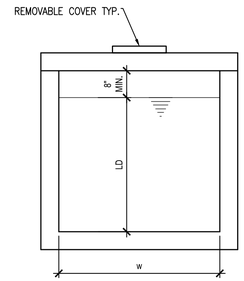

7 SECTION A-A
NOT TO SCALE

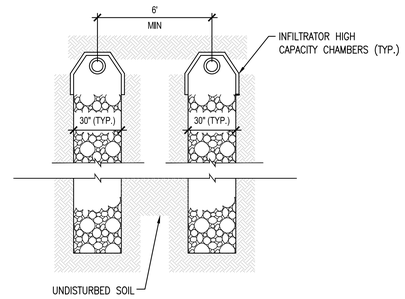

8 DRAIN FIELD SECTION
NOT TO SCALE

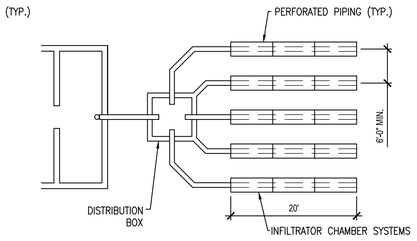

9 DRAIN FIELD PLAN
NOT TO SCALE

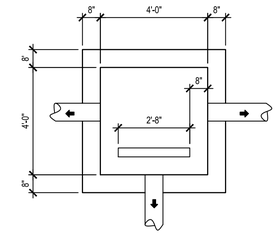

10 DISTRIBUTION BOX PLAN
NOT TO SCALE

SEPTIC TANK SCHEDULE				
NUMBER OF BEDROOMS	CAPACITY (GALLONS)	WIDTH "W"	LENGHT "L"	LIQUID DEPTH "LD"
2 OR LESS	1,000	4'–0"	7'–0"	5'–0"
3	1,200	4'–0"	8'–0"	5'–0"
4	1,500	4'–6"	9'–0"	5'–0"
5	2,000	5'–6"	10'–0"	5'–0"
6	2,500	7'–0"	10'–0"	5'–0"

NOTES:

Extra bedroom 150 gallons each. Extra dwelling units over 10,250 gallon each Extra fixture unit over 10,026 gals. per fixture unit. The normal desired depth below the surface for a septic tank is between 12" to 18". It is extremely important that any septic tank that is located below 3'–0" in depth shall have sufficient structural strength to withstand the loads superimposed above.

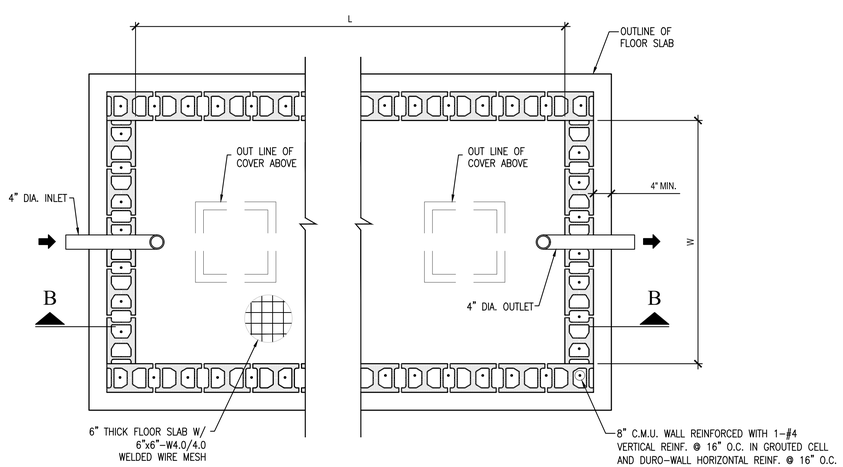

11 SEPTIC TANK PLAN
NOT TO SCALE

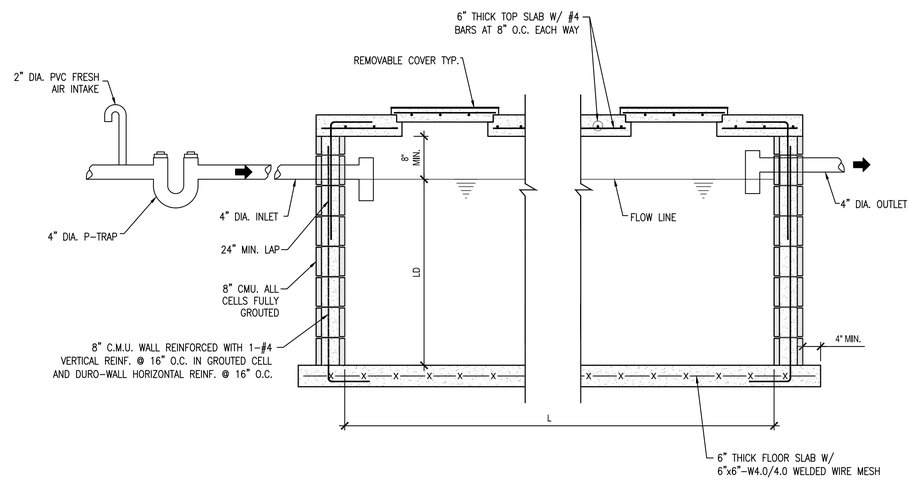

12 SECTION B-B - THRU SEPTIC TANK
NOT TO SCALE

JDG
BOSCHULTE ARCHITECTURE
BUILDTEC

AGENCY:
VIRGIN ISLANDS
DEPARTMENT OF PUBLIC WORKS
6 Susannaberg
Cruz Bay, VI 00830
phone: (340) 776-6346
website: www.dpw.vi.gov

ARCHITECT:
BOSCHULTE ARCHITECTURE, LLC
PO Box 303100
St. Thomas, VI00803
41-42 Kongens Gade
St. Thomas, VI 00802
phone: (340) 777-2525
e-mail: info@boschulte.com
website: www.boschulte.com

CIVIL ENGINEER:
BUILDTEC, LLC
PO Box 1000
Christiansted, VI 00823
7-1 Bonne Esperance
Christiansted, VI 00820
phone: (340)513-9918
e-mail: dcartwright@buildtecengi.com

PROFESSIONAL ENGINEER
DAMIAN CARTWRIGHT
29851 – 19
VIRGIN ISLANDS

STJ MAINTENANCE BUILDING FOR V.I. DEPT. OF PUBLIC WORKS 6 SUSANNABERG CRUZ BAY, VI 00830

PROGRESS SET

No.	Description	Date
1	100% PERMIT SET	07/14/23

REVISIONS

No.	Description	Date

Project number	
Date	12/20/2022
Drawn by	DC
Checked by	DC

UTILITY DETAILS

C017

Scale: AS SHOWN

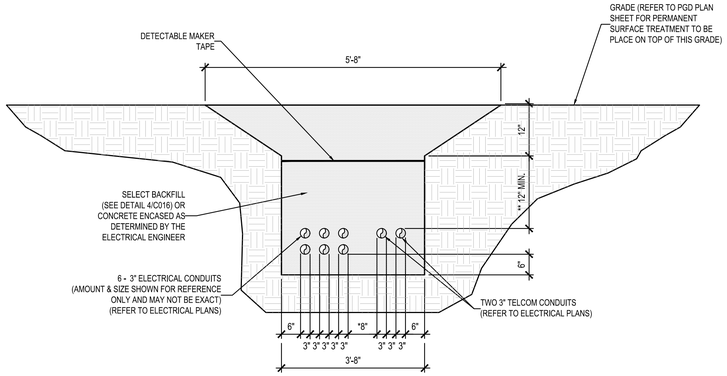

* VERIFY WITH ELECTRICAL PLANS & SPECIFICATIONS

** INCREASE DEPTH AS NECESSARY AT UTILITY CROSSINGS AND/OR AS REQUIRED AS PER ELECTRICAL PLANS & SPECIFICATIONS (REFER TO ELECTRICAL PLANS)

13 ELECTRICAL / TELECOM UTILITY TRENCH DETAIL

NOT TO SCALE

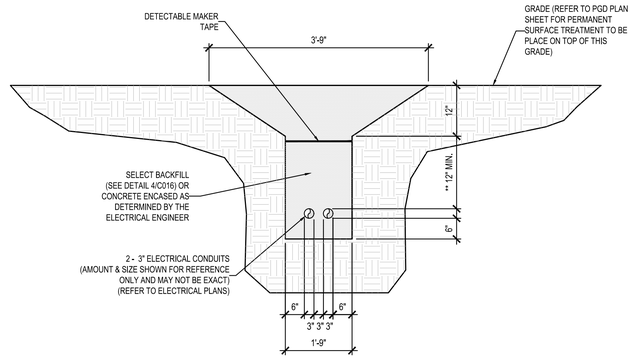

* VERIFY WITH ELECTRICAL PLANS & SPECIFICATIONS

** INCREASE DEPTH AS NECESSARY AT UTILITY CROSSINGS AND/OR AS REQUIRED AS PER ELECTRICAL PLANS & SPECIFICATIONS (REFER TO ELECTRICAL PLANS)

14 ELECTRICAL / TELECOM UTILITY TRENCH DETAIL

NOT TO SCALE

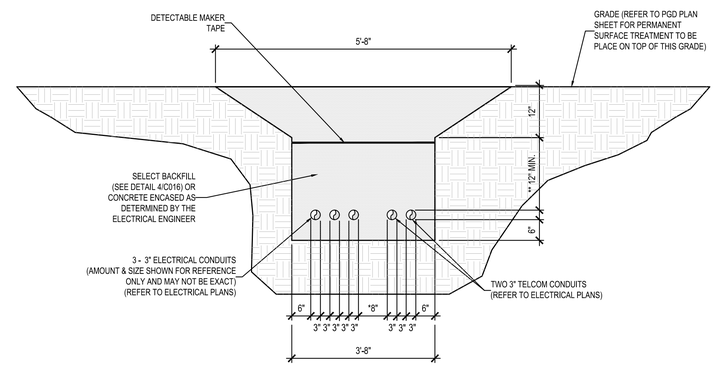

15 ELECTRICAL / TELECOM UTILITY TRENCH DETAIL

NOT TO SCALE

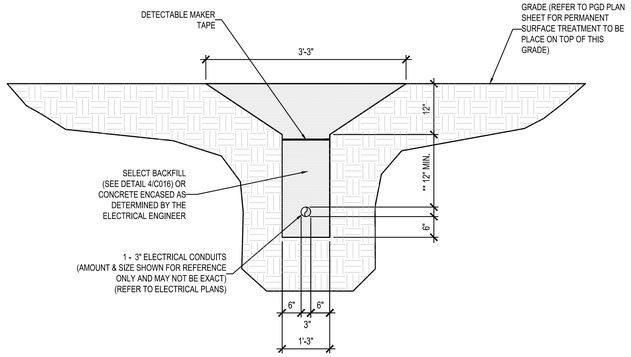

* VERIFY WITH ELECTRICAL PLANS & SPECIFICATIONS

** INCREASE DEPTH AS NECESSARY AT UTILITY CROSSINGS AND/OR AS REQUIRED AS PER ELECTRICAL PLANS & SPECIFICATIONS (REFER TO ELECTRICAL PLANS)

16 ELECTRICAL / TELECOM UTILITY TRENCH DETAIL

NOT TO SCALE

ELECTRICAL / TELECOM UTILITY TRENCH NOTES:

1. ALL INFORMATION ILLUSTRATED ON THESE DETAILS SHALL BE VERIFIED WITH THE ELECTRICAL PLANS & SPECIFICATIONS.
2. ANY DISCREPANCIES BETWEEN THESE DETAILS & THE ELECTRICAL PLANS & SPECIFICATIONS, THE ELECTRICAL PLANS & SPECIFICATIONS SHALL SUPERCEDE.

JDG

BOSCHULTE ARCHITECTURE

BUILDTEC

AGENCY:
VIRGIN ISLANDS
DEPARTMENT OF PUBLIC WORKS
6 Susannaberg
Cruz Bay, VI 00830
phone: (340) 776-6346
website: www.dpw.vi.gov

ARCHITECT:
BOSCHULTE ARCHITECTURE, LLC
PO Box 303100
21 Estate Thomas, 100B
41-42 Kongens Gade
St. Thomas, VI 00802
phone: (340) 777-2525
e-mail: info@boschulte.com
website: www.boschulte.com

CIVIL ENGINEER:
BUILDTEC, LLC
PO Box 1000
Christiansted, VI 00823
7-1 Bonne Esperance
Christiansted, VI 00820
phone: (340)513-6918
e-mail: dcartwright@buildtecengi.com

PROFESSIONAL ENGINEER
DAMIAN CARTWRIGHT
28851 - 1B
VIRGIN ISLANDS

STJ MAINTENANCE BUILDING
FOR
V.I. DEPT. OF PUBLIC WORKS
6 SUSANNABERG
CRUZ BAY, VI 00830

PROGRESS SET

No.	Description	Date
1	100% PERMIT SET	07/14/23

REVISIONS

No.	Description	Date

Project number	
Date	12/20/2022
Drawn by	DC
Checked by	DC

UTILITY DETAILS

C018

Scale: AS SHOWN

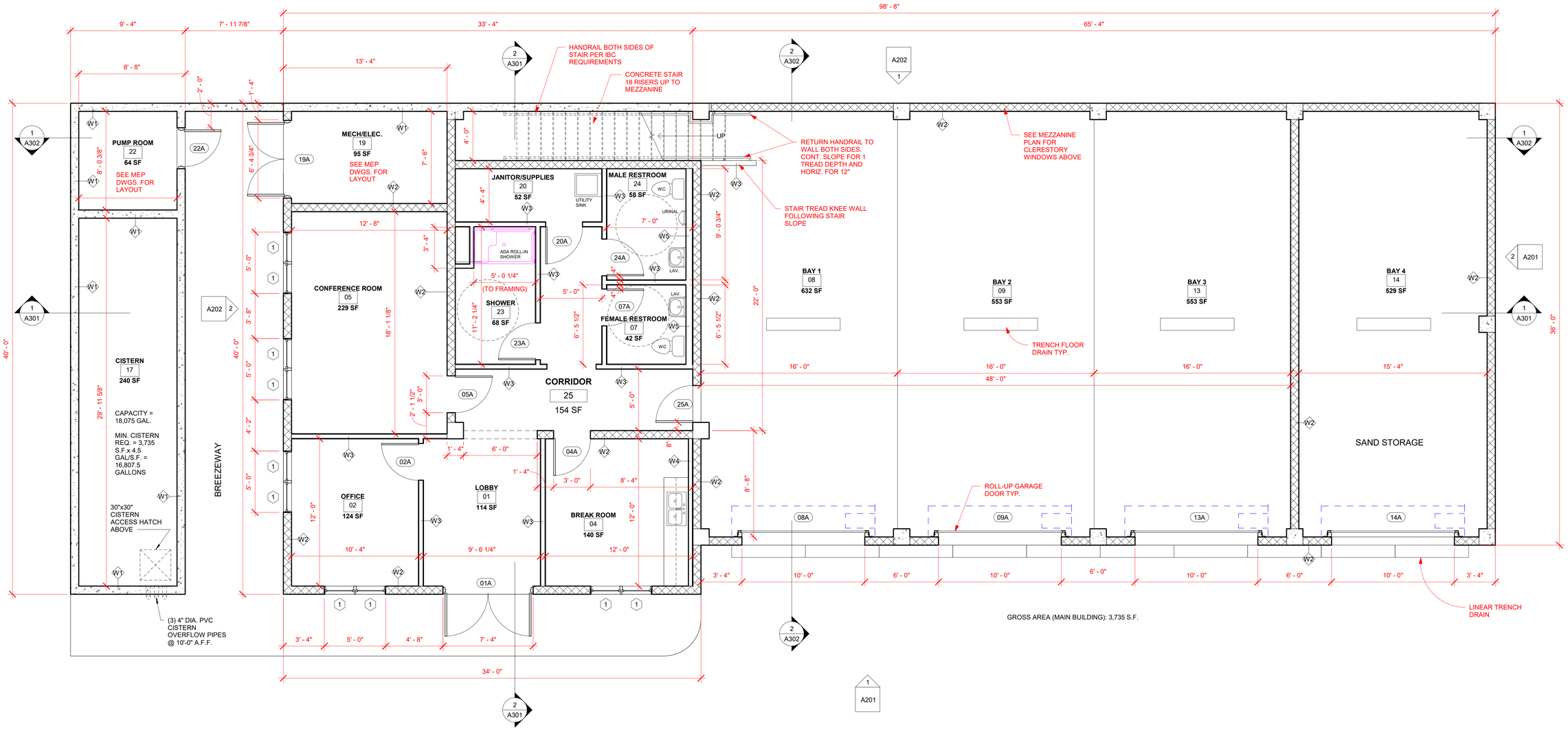

1 LEVEL ONE
1/4" = 1'-0"

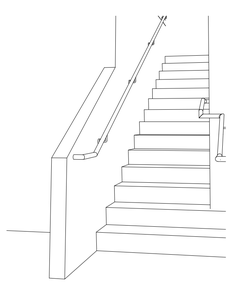

2 MEZZANINE STAIR KNEE WALL

BOSCHULTE ARCHITECTURE

ARCHITECT
BOSCHULTE ARCHITECTURE, LLC
PO Box 303190
St. Thomas, VI 00803
41-42 Kongens Gade
St. Thomas, VI 00802
phone: (340) 777-2375
e-mail: info@boschulte.com
website: www.boschulte.com

2021.007.02
DPW MAINTENANCE BUILDING
PARCEL 6A
ESTATE SUSANNABERG
ST. JOHN, USVI

PROGRESS SET

No.	Description	Date

REVISIONS

No.	Description	Date

Project number	2021.007.02
Date	6/30/2023
Drawn by	JTB
Checked by	JTB

LEVEL ONE FLOOR PLAN

A101

Scale: AS SHOWN

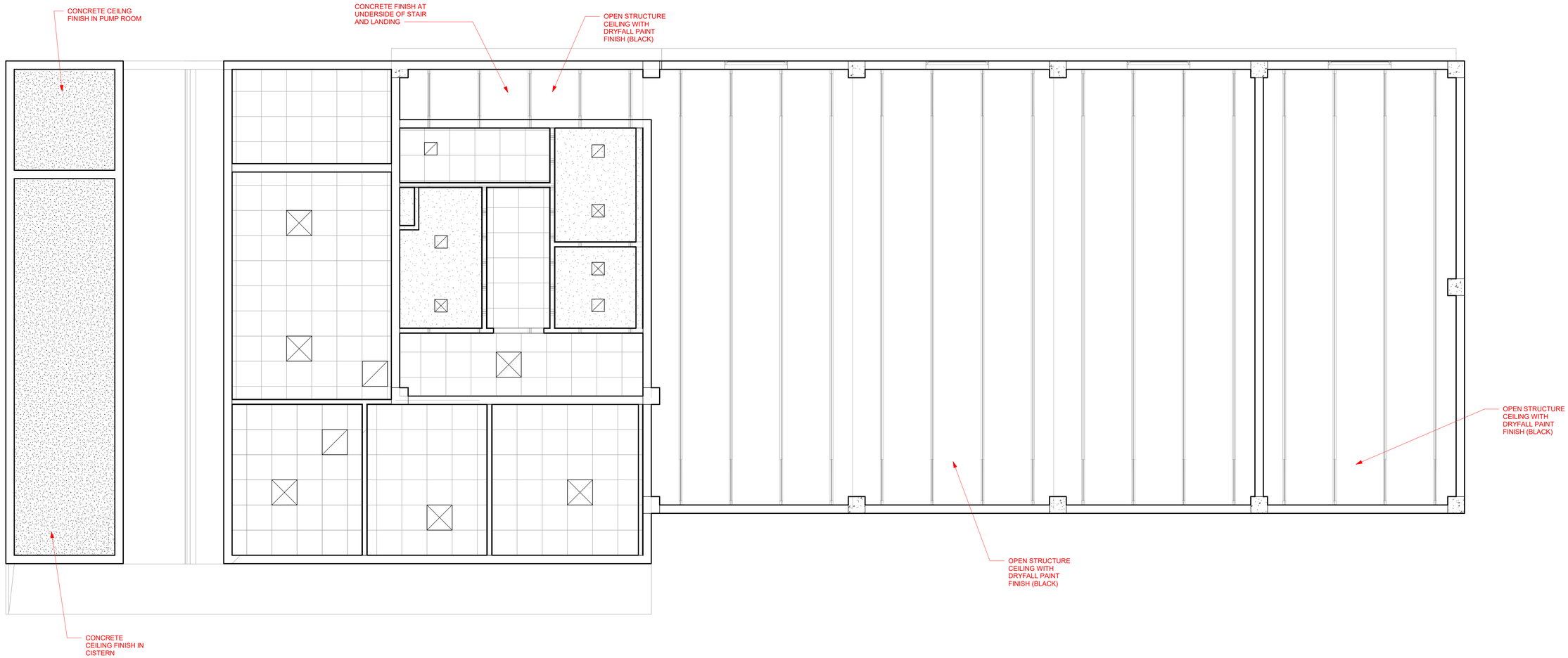

1 LEVEL ONE REFLECTED CEILING PLAN

1/4" = 1'-0"

N

REFLECTED CEILING PLAN LEGEND

- 24" x 24" ACOUSTICAL CEILING TILE
- 5/8" MOLD AND MOISTURE RESISTANCE GYPSUM WALLBOARD CEILING
- CONCRETE FINISH CEILING
- SUPPLY AIR AIR DEVICE - SEE MECHANICAL DWGS.
- SUPPLY AIR AIR DEVICE - SEE MECHANICAL DWGS.
- RETURN AIR DEVICE - SEE MECH. DWGS.
- RETURN AIR DEVICE - SEE MECH. DWGS.

SEE ELECTRICAL DWGS. FOR LIGHTING LAYOUT

BOSCHULTE ARCHITECTURE

ARCHITECT
BOSCHULTE ARCHITECTURE, LLC
PO Box 303190
St. Thomas, VI 00803
41-42 Kongens Gade
St. Thomas, VI 00802
phone: (340) 777-2375
e-mail: info@boschulte.com
website: www.boschulte.com

2021.007.02
DPW MAINTENANCE BUILDING
PARCEL 6A
ESTATE SUSANNABERG
ST. JOHN, USVI

PROGRESS SET

No.	Description	Date

REVISIONS

No.	Description	Date

Project number	2021.007.02
Date	6/30/2023
Drawn by	JTB
Checked by	JTB

LEVEL ONE REFLECTED CEILING PLAN

A101.1

Scale: AS SHOWN

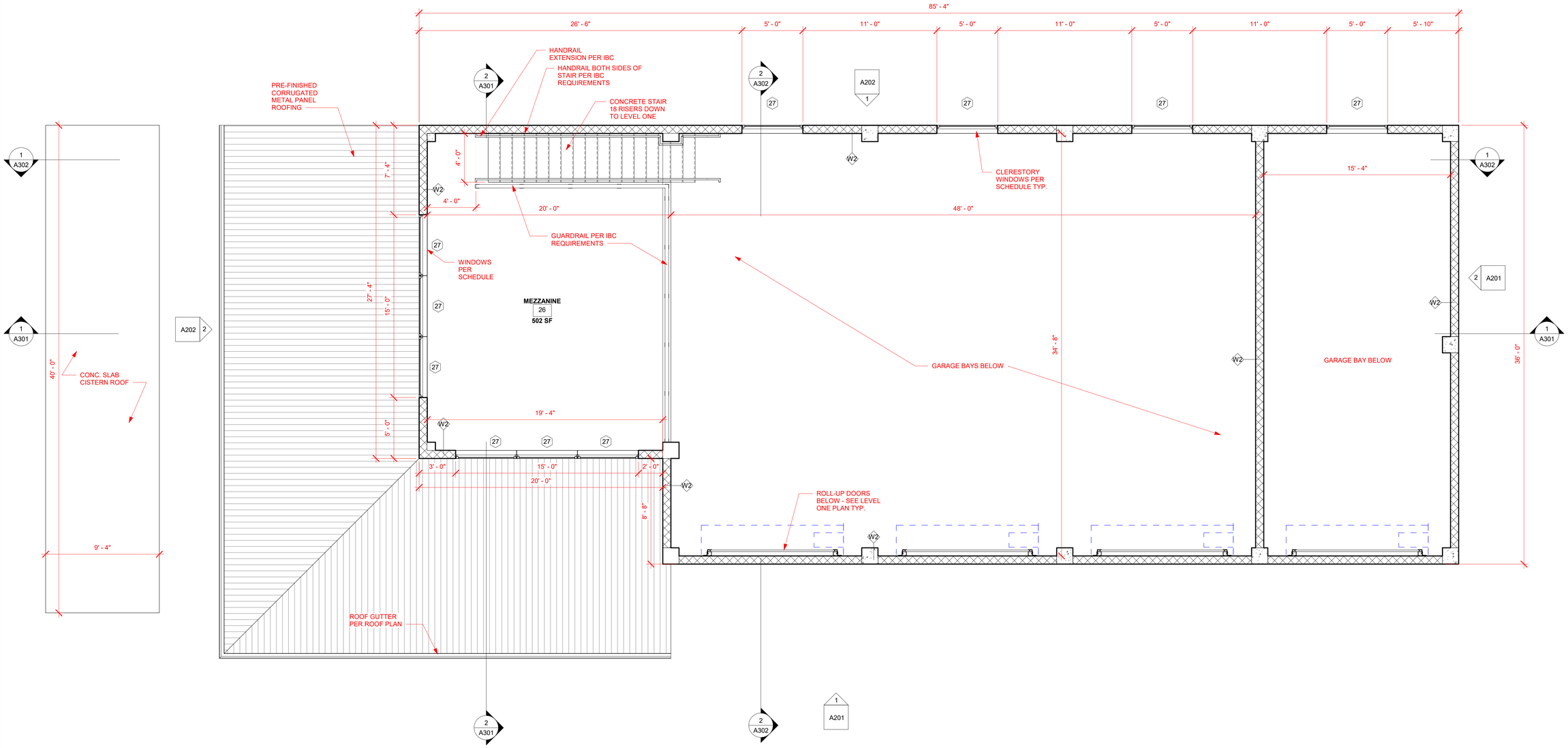

1 MEZZANINE LEVEL
1/4" = 1'-0"

N

BOSCHULTE ARCHITECTURE

ARCHITECT
BOSCHULTE ARCHITECTURE, LLC
PO Box 303190
St. Thomas, VI 00803
41-42 Kongens Gade
St. Thomas, VI 00802
phone: (340) 777-2375
e-mail: info@boschulte.com
website: www.boschulte.com

2021.007.02
DPW MAINTENANCE BUILDING
PARCEL 6A
ESTATE SUSANNABERG
ST. JOHN, USVI

PROGRESS SET

No.	Description	Date

REVISIONS

No.	Description	Date

Project number	2021.007.02
Date	6/30/2023
Drawn by	JTB
Checked by	JTB

MEZZANINE LEVEL FLOOR PLAN

A102

Scale: AS SHOWN

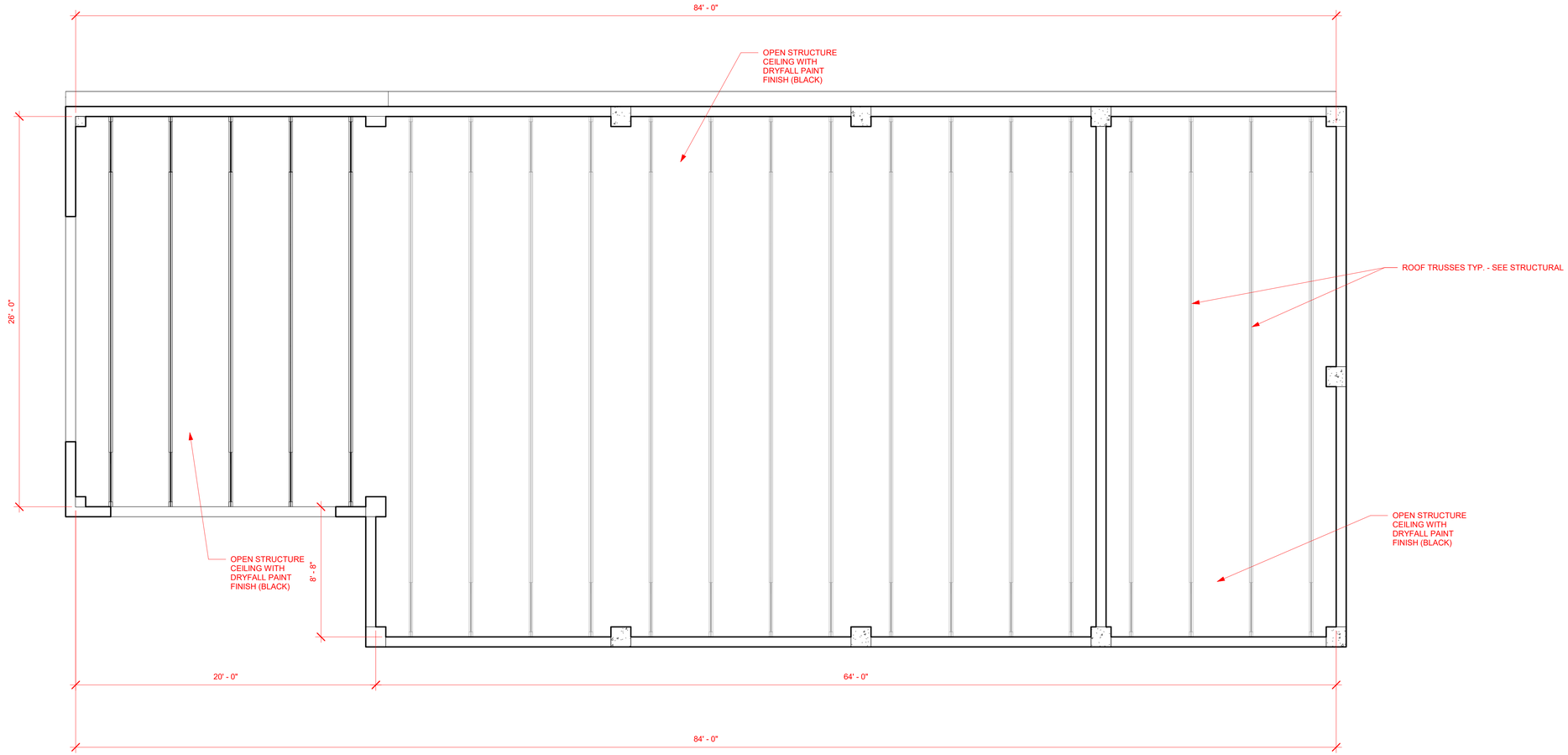

1 MEZZANINE LEVEL REFLECTED CEILING PLAN

1/4" = 1'-0"

N

REFLECTED CEILING PLAN LEGEND

- 24" x 24" ACOUSTICAL CEILING TILE
- 5/8" MOLD AND MOISTURE RESISTANCE GYPSUM WALLBOARD CEILING
- CONCRETE FINISH CEILING
- SUPPLY AIR AIR DEVICE - SEE MECHANICAL DWGS.
- SUPPLY AIR AIR DEVICE - SEE MECHANICAL DWGS.
- RETURN AIR DEVICE - SEE MECH. DWGS.
- RETURN AIR DEVICE - SEE MECH. DWGS.

SEE ELECTRICAL DWGS. FOR LIGHTING LAYOUT

BOSCHULTE ARCHITECTURE

ARCHITECT
BOSCHULTE ARCHITECTURE, LLC
PO Box 303190
St. Thomas, VI 00803
41-42 Kongens Gade
St. Thomas, VI 00802
phone: (340) 777-2375
e-mail: info@boschulte.com
website: www.boschulte.com

2021.007.02
DPW MAINTENANCE BUILDING
PARCEL 6A
ESTATE SUSANNABERG
ST. JOHN, USVI

PROGRESS SET

No.	Description	Date

REVISIONS

No.	Description	Date

Project number	2021.007.02
Date	6/30/2023
Drawn by	JTB
Checked by	JTB

MEZZANINE LEVEL REFLECTED CEILING PLAN

A102.1

Scale: AS SHOWN

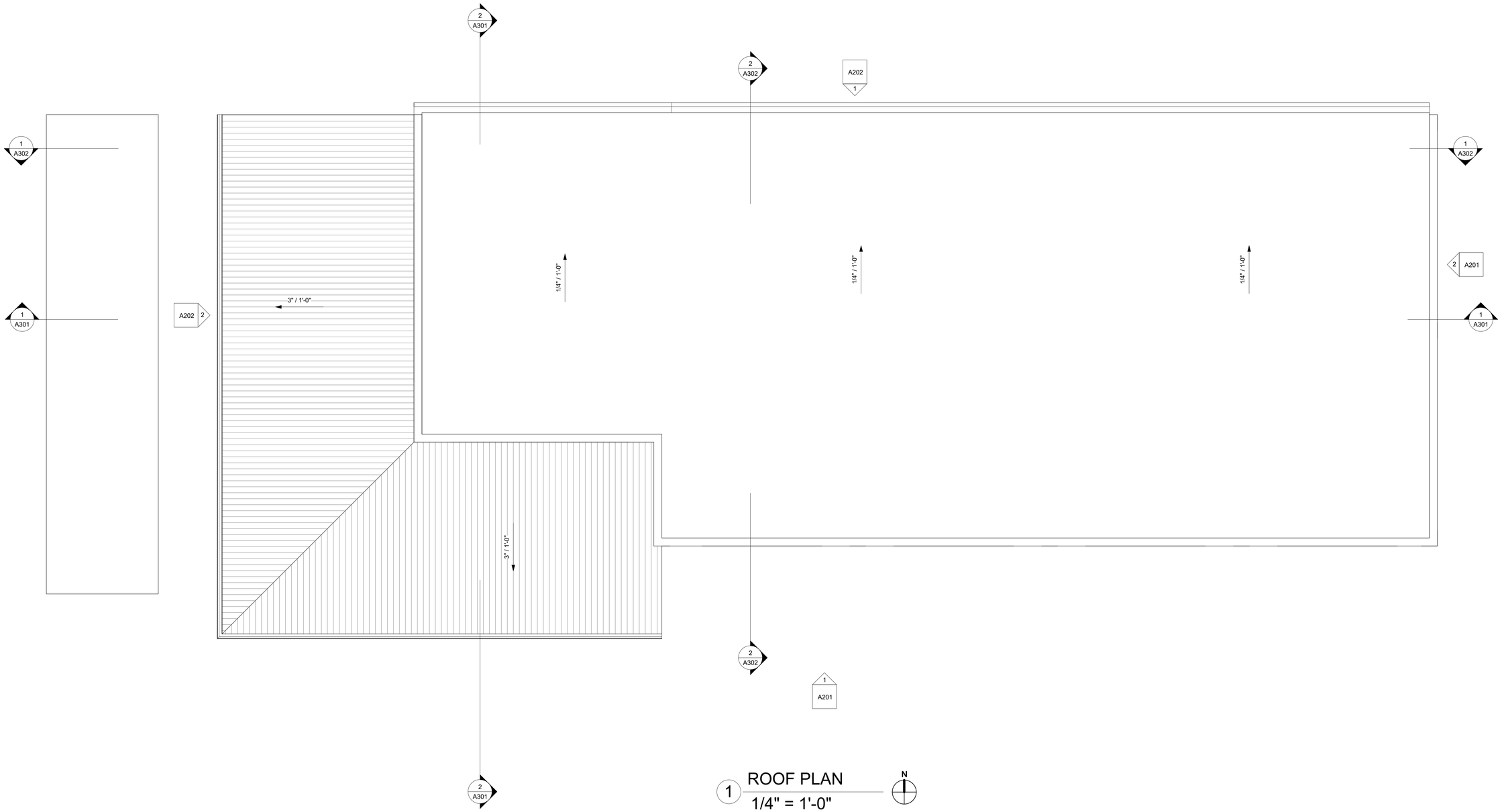

1 ROOF PLAN
1/4" = 1'-0"

BOSCHULTE ARCHITECTURE

ARCHITECT

BOSCHULTE ARCHITECTURE, LLC

PO Box 303190
St. Thomas: VI 00803

41-42 Kongens Gade
St. Thomas, VI 00802

phone: (340) 777-2375
e-mail: info@boschulte.com
website: www.boschulte.com

2021.007.02
DPW MAINTENANCE BUILDING
PARCEL 6A
ESTATE SUSANNABERG
ST. JOHN, USVI

PROGRESS SET

No.	Description	Date
1	SCHEMATIC DESIGN	04/06/2022
2	SCHEMATIC DESIGN	04/21/2022
3	DESIGN DEVELOPMENT	06/06/2022
4	CONSTRUCTION DOCUMENTS 50%	08/22/2022

REVISIONS

No.	Description	Date

Project number	2021.007.02
Date	6/30/2023
Drawn by	JTB
Checked by	JTB

ROOF PLAN

A103

Scale: AS SHOWN

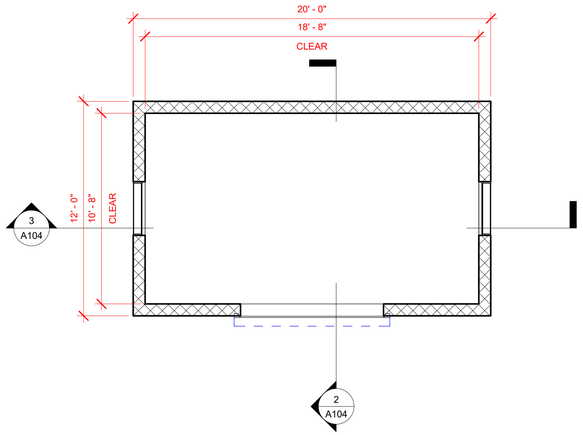

1 GENERATOR ENCLOSURE
1/4" = 1'-0"

N

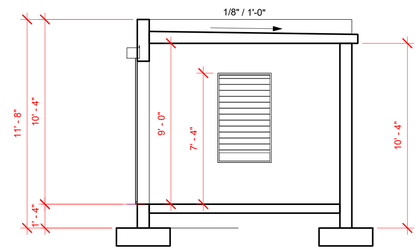

2 GENERATOR ENCLOSURE SECTION A
1/4" = 1'-0"

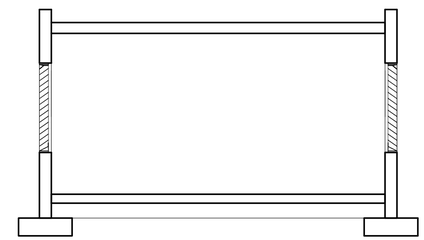

3 GENERATOR ENCLOSURE SECTION B
1/4" = 1'-0"

BOSCHULTE ARCHITECTURE

JDG

PRIME ARCHITECT

JAREDIAN DESIGN GROUP

5333 RAADETS GADE,
SUITE 14, ST. THOMAS, VI
00802-6900

PHONE: 340-777-1600
FAX:
ATT: John P. Woods

EMAIL: jaredian@vipowernet.net

CONSULTING ARCHITECT

BOSCHULTE ARCHITECTURE, LLC

PO Box 303190
St. Thomas, VI 00803

phone: (340) 777-2375
e-mail: info@boschulte.com
website: www.boschulte.com

2021.007.02
DPW MAINTENANCE BUILDING
PARCEL 6A
ESTATE SUSANNABERG
ST. JOHN, USVI

PROGRESS SET

No.	Description	Date

REVISIONS

No.	Description	Date

Project number	2021.007.02
Date	6/30/2023
Drawn by	JTB
Checked by	JTB

GENERATOR ENCLOSURE

A104

Scale: AS SHOWN

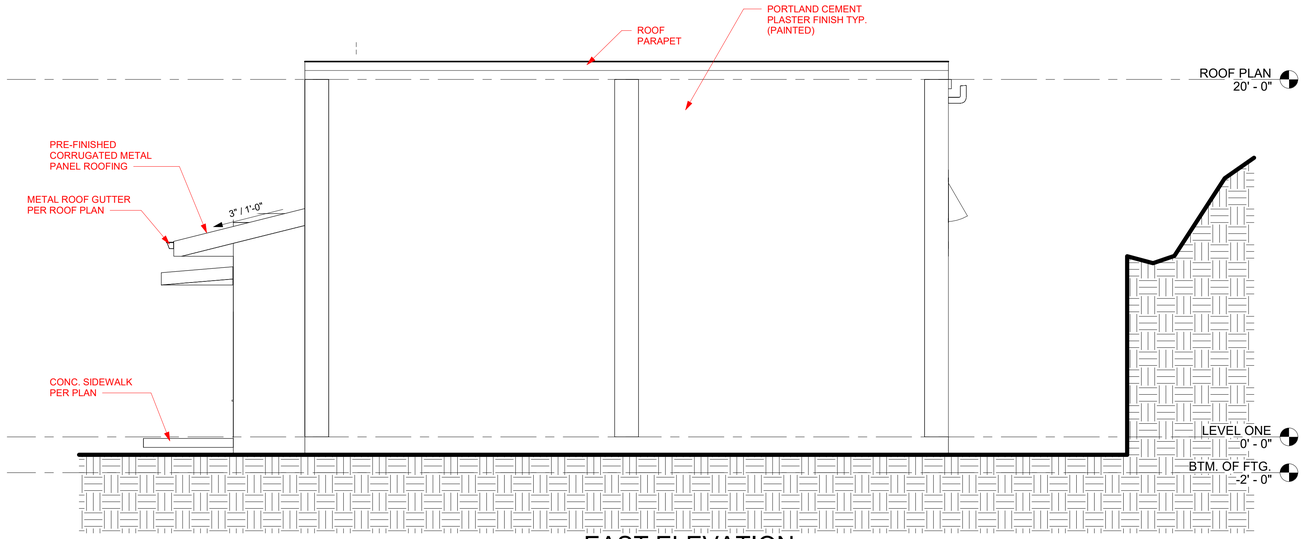

2 EAST ELEVATION
1/4" = 1'-0"

1 SOUTH ELEVATION
1/4" = 1'-0"

BOSCHULTE ARCHITECTURE

ARCHITECT
BOSCHULTE ARCHITECTURE, LLC
PO Box 303190
St. Thomas, VI 00803
41-42 Kongens Gade
St. Thomas, VI 00802
phone: (340) 777-2375
e-mail: info@boschulte.com
website: www.boschulte.com

2021.007.02
DPW MAINTENANCE BUILDING
PARCEL 6A
ESTATE SUSANNABERG
ST. JOHN, USVI

PROGRESS SET

No.	Description	Date

REVISIONS

No.	Description	Date

Project number	2021.007.02
Date	6/30/2023
Drawn by	JTB
Checked by	JTB

EAST ELEVATION & SOUTH ELEVATION

A201

Scale: AS SHOWN

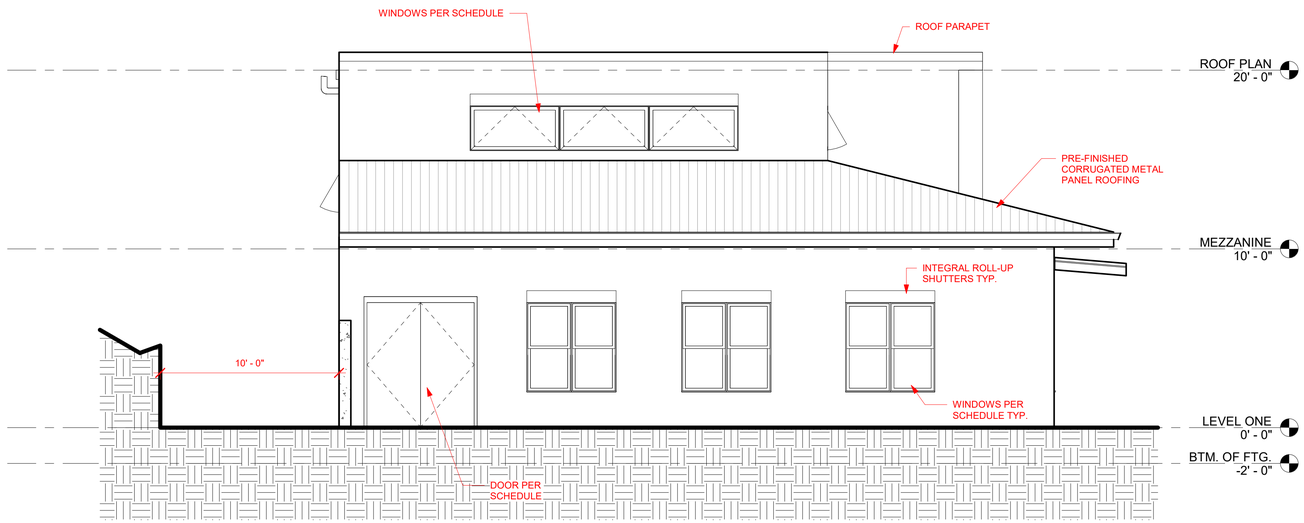

2 WEST ELEVATION
1/4" = 1'-0"

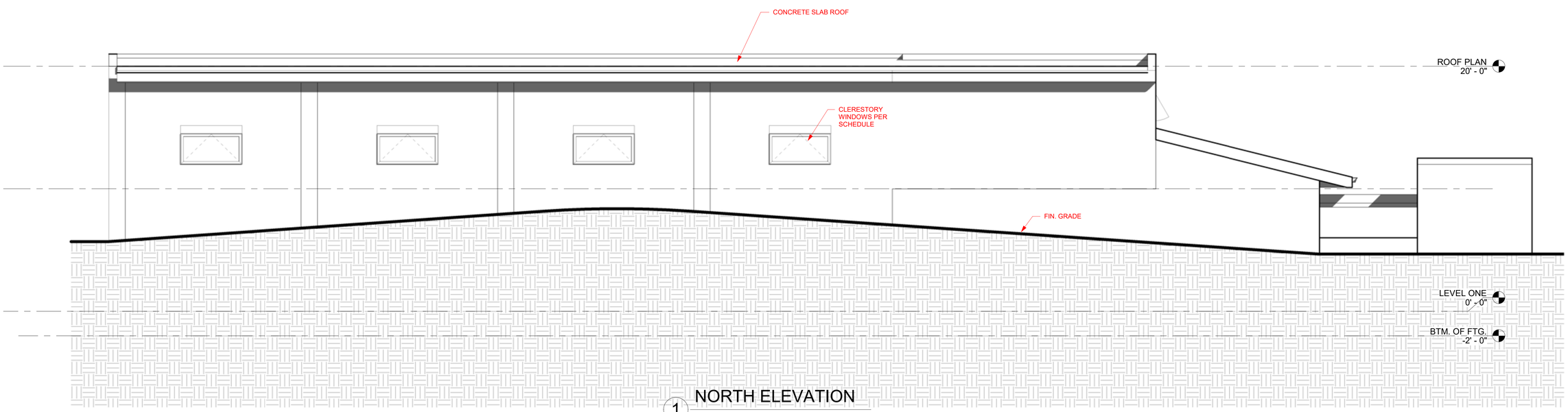

1 NORTH ELEVATION
1/4" = 1'-0"

BOSCHULTE ARCHITECTURE

ARCHITECT
BOSCHULTE ARCHITECTURE, LLC
PO Box 303190
St. Thomas, VI 00803
41-42 Kongens Gade
St. Thomas, VI 00802
phone: (340) 777-2375
e-mail: info@boschulte.com
website: www.boschulte.com

2021.007.02
DPW MAINTENANCE BUILDING
PARCEL 6A
ESTATE SUSANNABERG
ST. JOHN, USVI

PROGRESS SET

No.	Description	Date
1	SCHEMATIC DESIGN	04/06/2022
2	SCHEMATIC DESIGN	04/21/2022
3	DESIGN DEVELOPMENT	06/06/2022
4	CONSTRUCTION DOCUMENTS 50%	08/22/2022

REVISIONS

No.	Description	Date

Project number	2021.007.02
Date	6/30/2023
Drawn by	JTB
Checked by	JTB

NORTH ELEVATION &
WEST ELEVATION

A202

Scale: AS SHOWN

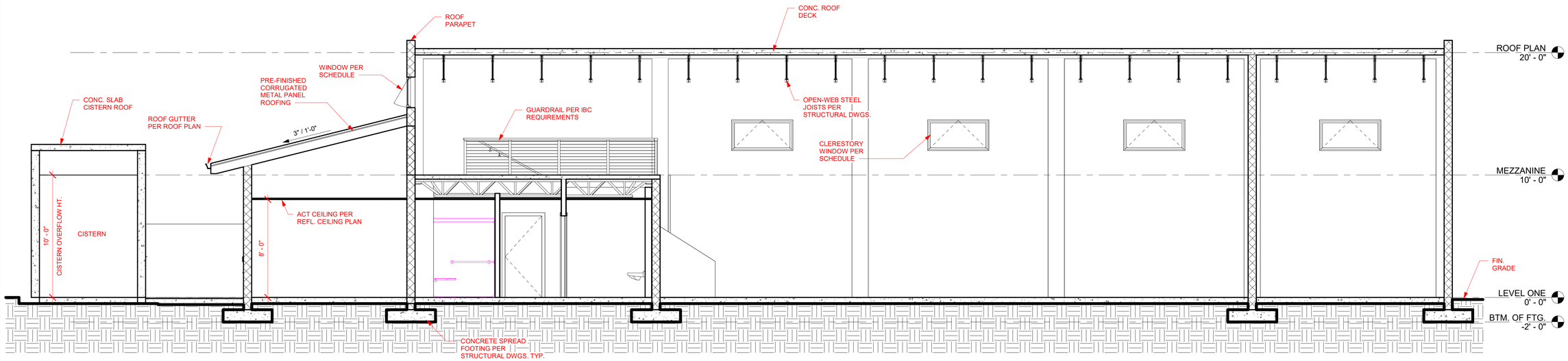

1 BUILDING SECTION 1

1/4" = 1'-0"

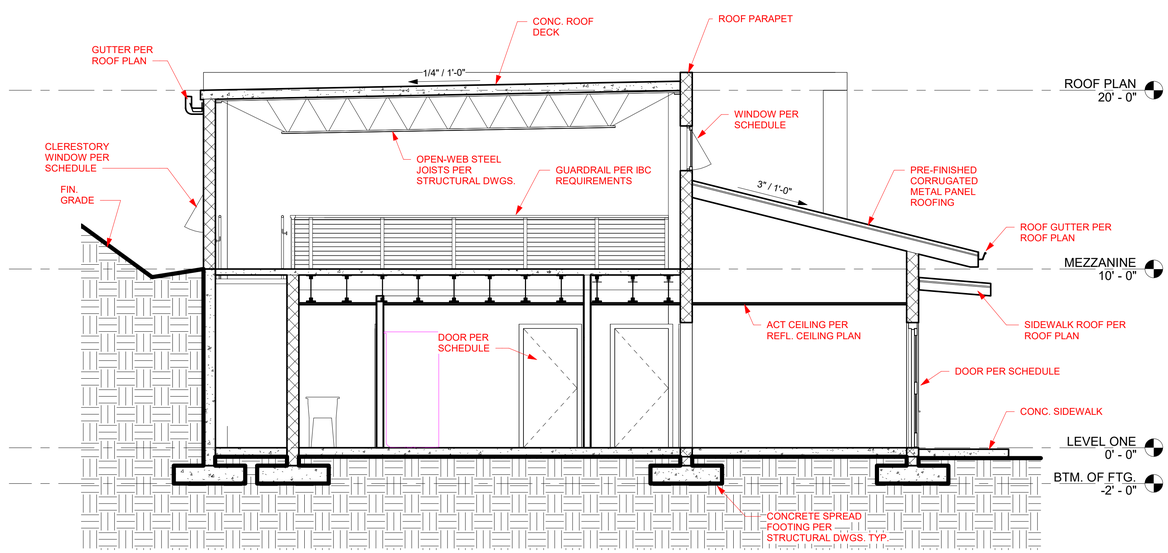

2 BUILDING SECTION 2

1/4" = 1'-0"

BOSCHULTE ARCHITECTURE

ARCHITECT
BOSCHULTE ARCHITECTURE, LLC
PO Box 303190
St. Thomas, VI 00803
41-42 Kongens Gade
St. Thomas, VI 00802
phone: (340) 777-2375
e-mail: info@boschulte.com
website: www.boschulte.com

2021.007.02

DPW MAINTENANCE BUILDING
PARCEL 6A
ESTATE SUSANNABERG
ST. JOHN, USVI

PROGRESS SET

No.	Description	Date

REVISIONS

No.	Description	Date

Project number	2021.007.02
Date	6/30/2023
Drawn by	JTB
Checked by	JTB

BUILDING SECTIONS

A301

Scale: AS SHOWN

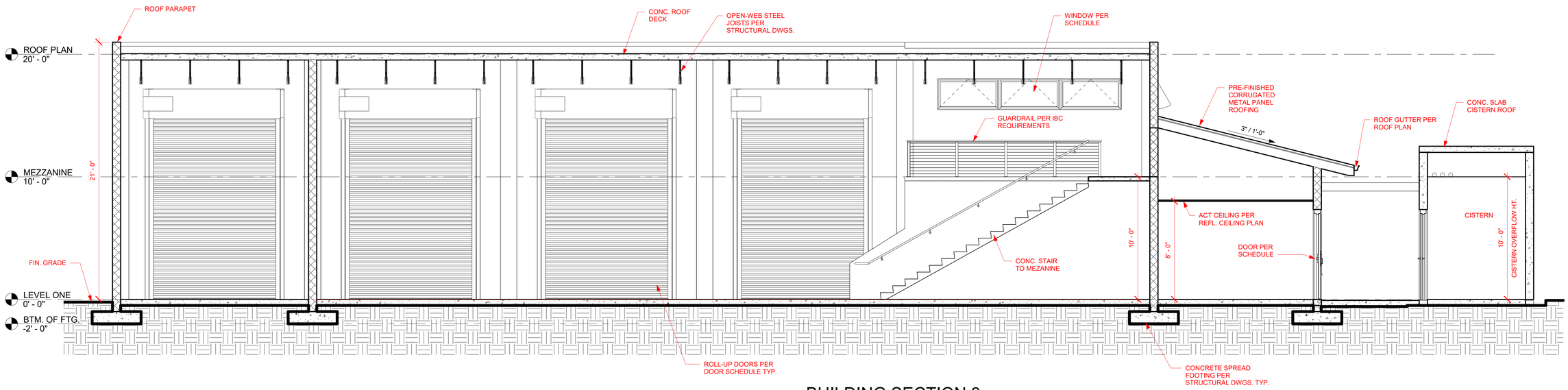

1 BUILDING SECTION 3

1/4" = 1'-0"

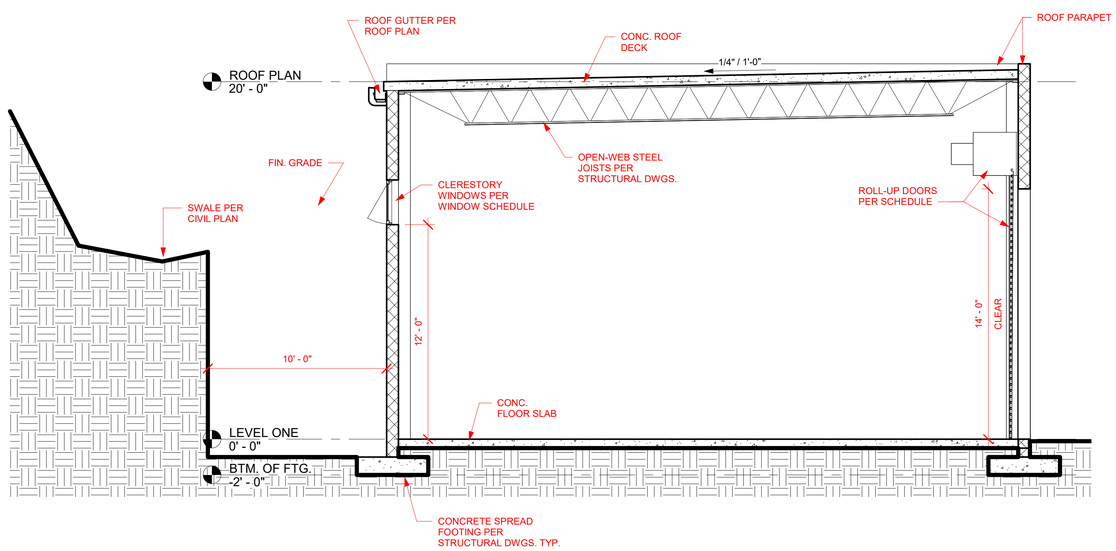

2 BUILDING SECTION 4

1/4" = 1'-0"

BOSCHULTE ARCHITECTURE

ARCHITECT

BOSCHULTE ARCHITECTURE, LLC

PO Box 303190
St. Thomas, VI 00803

41-42 Kongens Gade
St. Thomas, VI 00802

phone: (340) 777-2375
e-mail: info@boschulte.com
website: www.boschulte.com

2021.007.02

DPW MAINTENANCE BUILDING
PARCEL 6A
ESTATE SUSANNABERG
ST. JOHN, USVI

PROGRESS SET

No.	Description	Date

REVISIONS

No.	Description	Date

Project number	2021.007.02
Date	6/30/2023
Drawn by	JTB
Checked by	JTB

BUILDING SECTIONS

A302

Scale: AS SHOWN

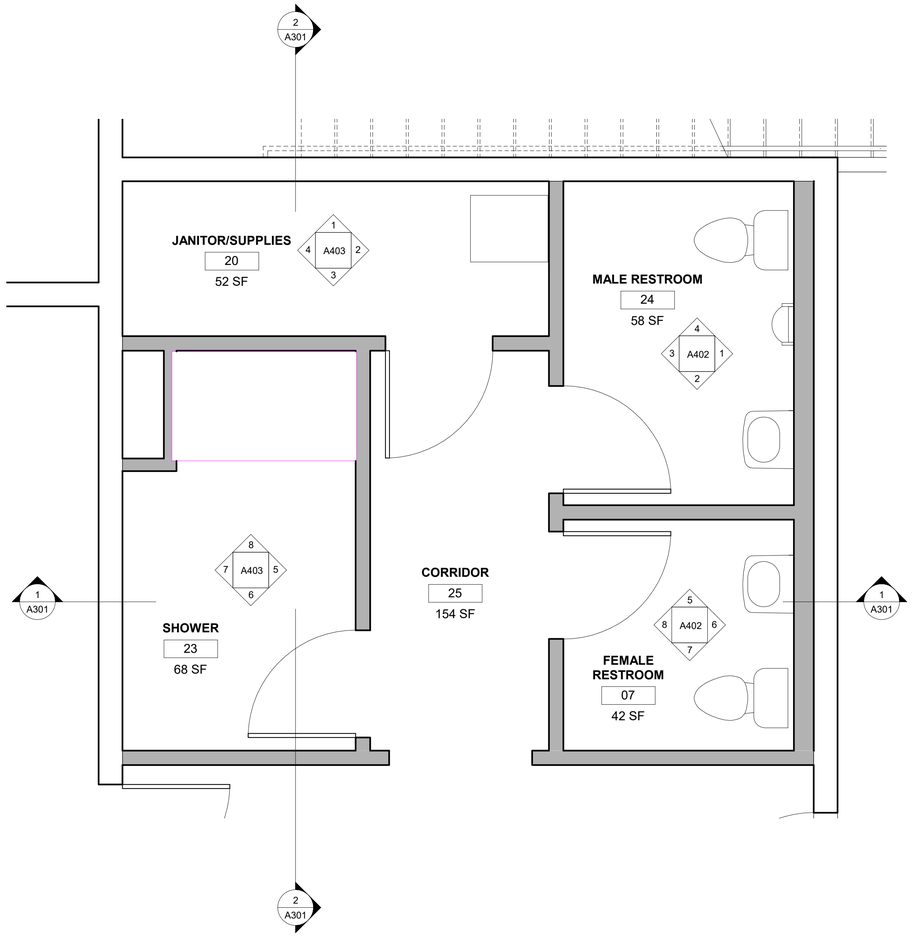

1 ENLARGED RESTROOM PLANS
1/2" = 1'-0"

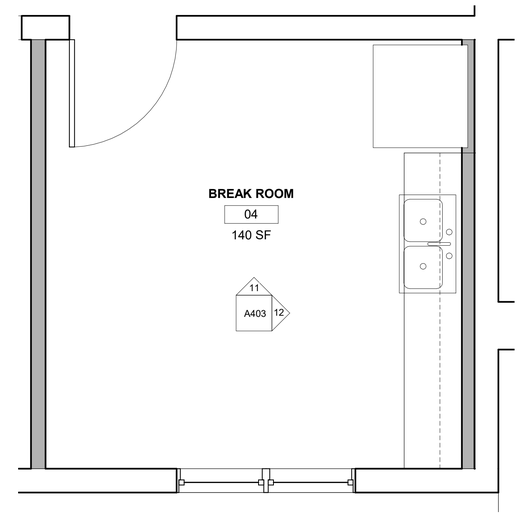

2 ENLARGED BREAK ROOM PLAN
1/2" = 1'-0"

BOSCHULTE ARCHITECTURE

ARCHITECT
BOSCHULTE ARCHITECTURE, LLC
PO Box 303190
St. Thomas, VI 00803
41-42 Kongens Gade
St. Thomas, VI 00802
phone: (340) 777-2375
e-mail: info@boschulte.com
website: www.boschulte.com

2021.007.02
DPW MAINTENANCE BUILDING
PARCEL 6A
ESTATE SUSANNABERG
ST. JOHN, USVI

PROGRESS SET

No.	Description	Date
1	SCHEMATIC DESIGN	04/06/2022
2	SCHEMATIC DESIGN	04/21/2022
3	DESIGN DEVELOPMENT	06/06/2022
4	CONSTRUCTION DOCUMENTS 50%	08/22/2022

REVISIONS

No.	Description	Date

Project number	2021.007.02
Date	6/30/2023
Drawn by	JTB
Checked by	JTB

ENLARGED FLOOR PLANS

A401

Scale: AS SHOWN

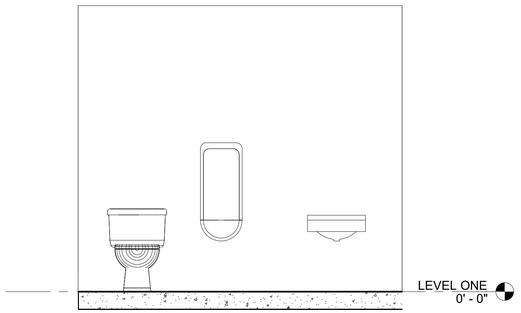

1 MALE RESTROOM 1
1/2" = 1'-0"

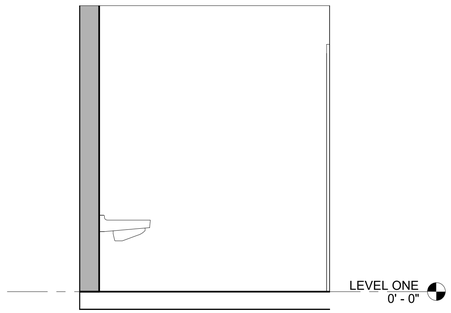

2 MALE RESTROOM 2
1/2" = 1'-0"

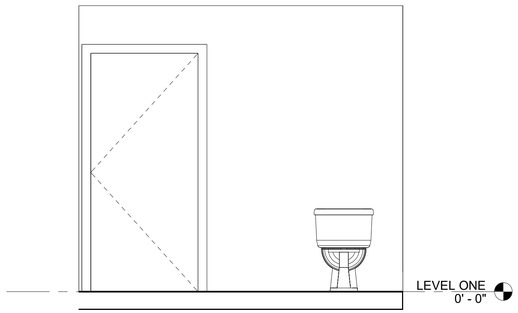

3 MALE RESTROOM 3
1/2" = 1'-0"

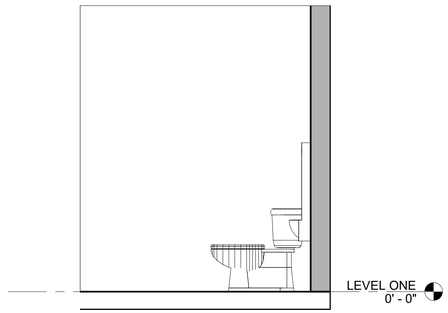

4 MALE RESTROOM 4
1/2" = 1'-0"

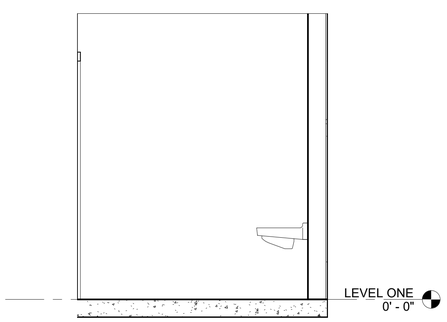

5 FEMALE RESTROOM 1
1/2" = 1'-0"

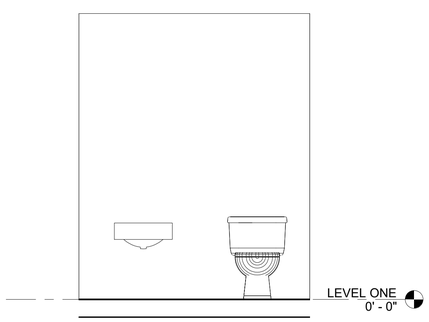

6 FEMALE RESTROOM 2
1/2" = 1'-0"

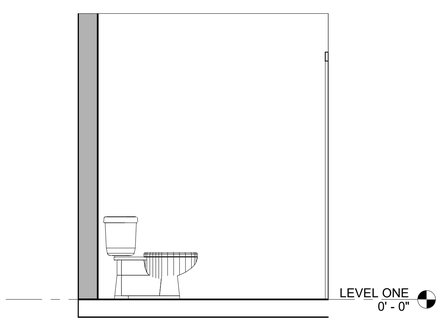

7 FEMALE RESTROOM 3
1/2" = 1'-0"

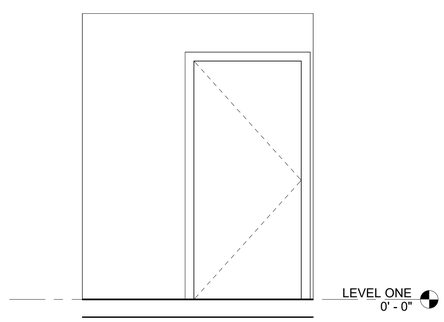

8 FEMALE RESTROOM 4
1/2" = 1'-0"

BOSCHULTE ARCHITECTURE

ARCHITECT
BOSCHULTE ARCHITECTURE, LLC
PO Box 303190
St. Thomas, VI 00803
41-42 Kongens Gade
St. Thomas, VI 00802
phone: (340) 777-2375
e-mail: info@boschulte.com
website: www.boschulte.com

2021.007.02
DPW MAINTENANCE BUILDING
PARCEL 6A
ESTATE SUSANNABERG
ST. JOHN, USVI

PROGRESS SET

No.	Description	Date
1	SCHEMATIC DESIGN	04/06/2022
2	SCHEMATIC DESIGN	04/21/2022
3	DESIGN DEVELOPMENT	06/06/2022
4	CONSTRUCTION DOCUMENTS 50%	08/22/2022

REVISIONS

No.	Description	Date

Project number	2021.007.02
Date	6/30/2023
Drawn by	JTB
Checked by	JTB

INTERIOR ELEVATIONS

A402

Scale: AS SHOWN

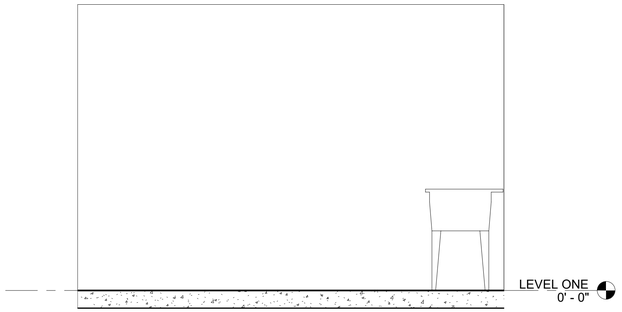

1 JANITOR/SUPPLIES 1
1/2" = 1'-0"

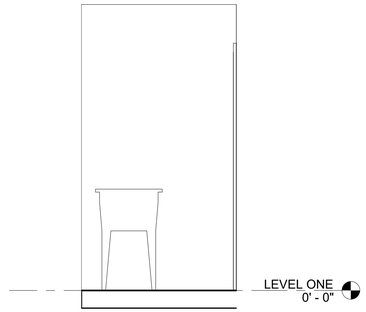

2 JANITOR/SUPPLIES 2
1/2" = 1'-0"

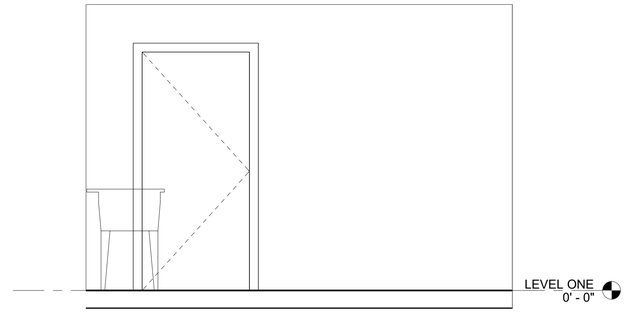

3 JANITOR/SUPPLIES 3
1/2" = 1'-0"

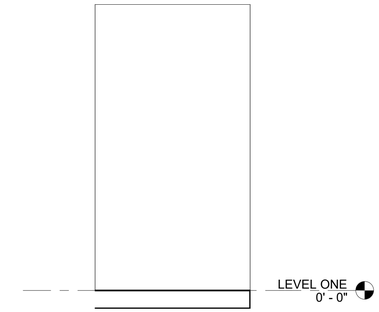

4 JANITOR/SUPPLIES 4
1/2" = 1'-0"

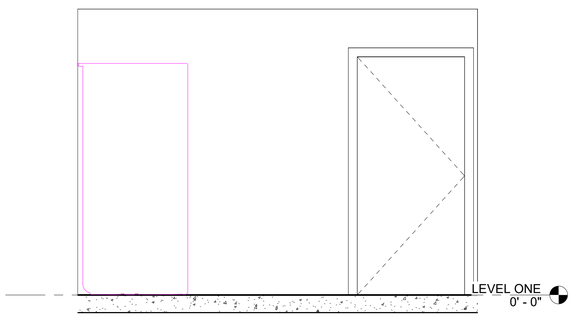

5 SHOWER 1
1/2" = 1'-0"

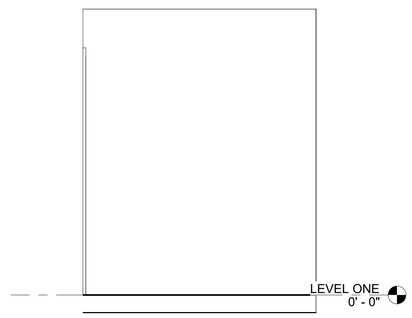

6 SHOWER 2
1/2" = 1'-0"

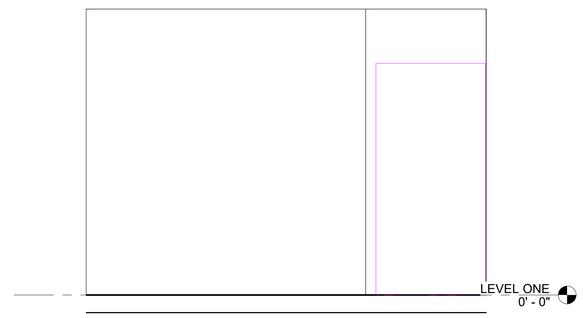

7 SHOWER 3
1/2" = 1'-0"

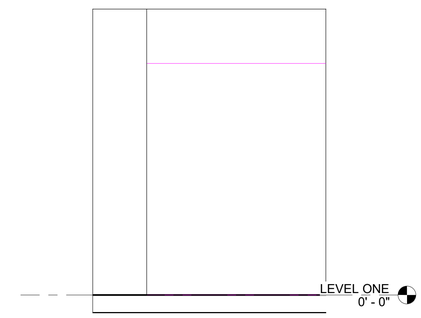

8 SHOWER 4
1/2" = 1'-0"

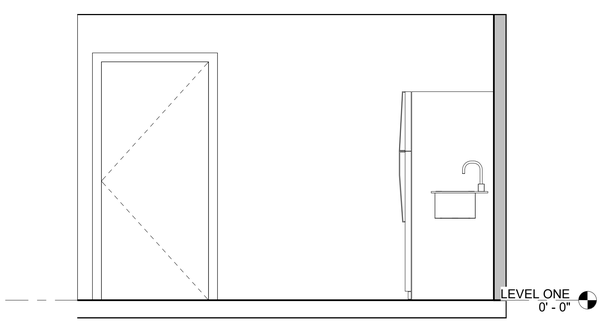

11 BREAKROOM 1
1/2" = 1'-0"

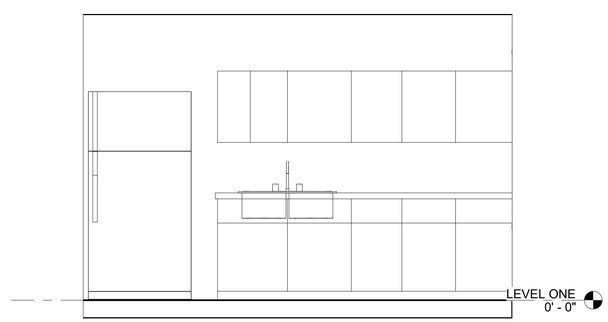

12 BREAKROOM 2
1/2" = 1'-0"

BOSCHULTE ARCHITECTURE

ARCHITECT
BOSCHULTE ARCHITECTURE, LLC
PO Box 303190
St. Thomas, VI 00803
41-42 Kongens Gade
St. Thomas, VI 00802
phone: (340) 777-2375
e-mail: info@boschulte.com
website: www.boschulte.com

2021.007.02
DPW MAINTENANCE BUILDING
PARCEL 6A
ESTATE SUSANNABERG
ST. JOHN, USVI

PROGRESS SET

No.	Description	Date

REVISIONS

No.	Description	Date

Project number	2021.007.02
Date	6/30/2023
Drawn by	JTB
Checked by	JTB

INTERIOR ELEVATIONS

A403

Scale: AS SHOWN

DOOR SCHEDULE

DOOR MARK	DESCRIPTION	WIDTH	HEIGHT	THICKNESS	FUNCTION	COMMENTS
01A	Door-Exterior-Double-Two_Lite: 84" x 80"	7' - 0"	6' - 8"	0' - 1 3/4"	Exterior	
02A	Single-Flush_Swing: 36" x 80" INT	3' - 0"	6' - 8"	0' - 1 3/8"	Interior	
04A	Single-Flush_Swing: 36" x 80" EXT	3' - 0"	6' - 8"	0' - 1 3/4"	Exterior	
05A	Single-Flush_Swing: 36" x 80" INT	3' - 0"	6' - 8"	0' - 1 3/8"	Interior	
07A	Single-Flush_Swing: 36" x 80" INT	3' - 0"	6' - 8"	0' - 1 3/8"	Interior	
08A	Door-StormDefender-FaceOfWallMount_Cornell: 10' WIDE x 14' HIGH	10' - 0"	17' - 2"		Interior	
09A	Door-StormDefender-FaceOfWallMount_Cornell: 10' WIDE x 14' HIGH	10' - 0"	17' - 2"		Interior	
13A	Door-StormDefender-FaceOfWallMount_Cornell: 10' WIDE x 14' HIGH	10' - 0"	17' - 2"		Interior	
14A	Door-StormDefender-FaceOfWallMount_Cornell: 10' WIDE x 14' HIGH	10' - 0"	17' - 2"		Interior	
14B	Door-Opening: 72" x 84"	0' - 0"	0' - 0"		Interior	
14G	Door_Overhead-Shutter_OHD_Allura-653-FaceMnt: Compact Bottom Bar	0' - 0"	0' - 0"	0' - 0"	Interior	
19A	Door-Exterior-Double: 72" x 84"	6' - 0"	7' - 0"	0' - 1 3/4"	Exterior	
20A	Single-Flush_Swing: 36" x 80" INT	3' - 0"	6' - 8"	0' - 1 3/8"	Interior	
22A	Door-Passage-Single-Flush: 36" x 84"	3' - 0"	7' - 0"	0' - 1 3/4"	Exterior	
23A	Single-Flush_Swing: 36" x 80" INT	3' - 0"	6' - 8"	0' - 1 3/8"	Interior	
24A	Single-Flush_Swing: 36" x 80" INT	3' - 0"	6' - 8"	0' - 1 3/8"	Interior	
25A	Single-Flush_Swing: 36" x 80" EXT	3' - 0"	6' - 8"	0' - 1 3/4"	Exterior	
Grand total: 17						

BOSCHULTE ARCHITECTURE

JDG

PRIME ARCHITECT

JAREDIAN DESIGN GROUP

5333 RAADETS GADE,
SUITE 14, ST. THOMAS, VI
00802-6900

PHONE: 340-777-1600
FAX:
ATT: John P. Woods

EMAIL: jaredian@vipowernet.net

CONSULTING ARCHITECT

BOSCHULTE ARCHITECTURE, LLC

PO Box 303190
St. Thomas, VI 00803

phone: (340) 777-2375
e-mail: info@boschulte.com
website: www.boschulte.com

2021.007.02
DPW MAINTENANCE BUILDING
PARCEL 6A
ESTATE SUSANNABERG
ST. JOHN, USVI

PROGRESS SET

No.	Description	Date

REVISIONS

No.	Description	Date

Project number	2021.007.02
Date	6/30/2023
Drawn by	JTB
Checked by	JTB

DOOR SCHEDULE

A601

Scale: AS SHOWN

Window Schedule

Type Mark	Rough Opening		Type	Detail			Comments
	Width	Height		Head	Jamb	Sill	
1	2' - 6"	5' - 0"	Double Hung				
27	5' - 0"	2' - 6"	Window-Awning-Single				

BOSCHULTE ARCHITECTURE

JDG

PRIME ARCHITECT

JAREDIAN DESIGN GROUP

5333 RAADETS GADE,
SUITE 14, ST. THOMAS, VI
00802-6900

PHONE: 340-777-1600
FAX:
ATT: John P. Woods

EMAIL: jaredian@vipowernet.net

CONSULTING ARCHITECT

BOSCHULTE ARCHITECTURE, LLC

PO Box 303190
St. Thomas, VI 00803

phone: (340) 777-2375
e-mail: info@boschulte.com
website: www.boschulte.com

2021.007.02
DPW MAINTENANCE BUILDING
PARCEL 6A
ESTATE SUSANNABERG
ST. JOHN, USVI

PROGRESS SET

No.	Description	Date

REVISIONS

No.	Description	Date

Project number	2021.007.02
Date	6/30/2023
Drawn by	JTB
Checked by	JTB

WINDOW SCHEDULE

A602

Scale: AS SHOWN

ROOM FINISH SCHEDULE

ROOM NUMBER	ROOM NAME	FLOOR	BASE	CEILING	WALL FINISH				COMMENTS
					NORTH	EAST	SOUTH	WEST	
01	LOBBY	PORCELAIN TILE	PORCELAIN TILE	ACOUSTICAL CEILING TILE					
02	OFFICE	PORCELAIN TILE	PORCELAIN TILE	ACOUSTICAL CEILING TILE					
04	BREAK ROOM	PORCELAIN TILE	PORCELAIN TILE	ACOUSTICAL CEILING TILE					
05	CONFERENCE ROOM	PORCELAIN TILE	PORCELAIN TILE	ACOUSTICAL CEILING TILE					
07	FEMALE RESTROOM	PORCELAIN TILE	PORCELAIN TILE	GYPSUM BOARD, MOLD RESISTANT					
08	BAY 1	CONCRETE, SELAED	NONE	OPEN STRUCTURE					
09	BAY 2	CONCRETE, SELAED	NONE	OPEN STRUCTURE					
13	BAY 3	CONCRETE, SELAED	NONE	OPEN STRUCTURE					
14	BAY 4	CONCRETE, SELAED	NONE	OPEN STRUCTURE					
17	CISTERN	CONCRETE, SELAED	NONE	EXPOSED CONCRETE SLAB					
19	MECH/ELEC.	CONCRETE, SELAED	NONE	EXPOSED CONCRETE SLAB					
20	JANITOR/SUPPLIES	PORCELAIN TILE	PORCELAIN TILE	ACOUSTICAL CEILING TILE					
22	PUMP ROOM	CONCRETE, SELAED	NONE	EXPOSED CONCRETE SLAB					
23	SHOWER	PORCELAIN TILE	PORCELAIN TILE	GYPSUM BOARD, MOLD RESISTANT					
24	MALE RESTROOM	PORCELAIN TILE	PORCELAIN TILE	GYPSUM BOARD, MOLD RESISTANT					
25	CORRIDOR	PORCELAIN TILE	PORCELAIN TILE	ACOUSTICAL CEILING TILE					
26	MEZZANINE	PORCELAIN TILE	PORCELAIN TILE	OPEN STRUCTURE					
Grand total: 17									

BOSCHULTE ARCHITECTURE

JDG

PRIME ARCHITECT

JAREDIAN DESIGN GROUP

5333 RAADETS GADE,
SUITE 14, ST. THOMAS, VI
00802-6900

PHONE: 340-777-1600
FAX:
ATT: John P. Woods

EMAIL: jaredian@vipowernet.net

CONSULTING ARCHITECT

BOSCHULTE ARCHITECTURE, LLC

PO Box 303190
St. Thomas, VI 00803

phone: (340) 777-2375
e-mail: info@boschulte.com
website: www.boschulte.com

2021.007.02
DPW MAINTENANCE BUILDING
PARCEL 6A
ESTATE SUSANNABERG
ST. JOHN, USVI

PROGRESS SET

No.	Description	Date

REVISIONS

No.	Description	Date

Project number	2021.007.02
Date	6/30/2023
Drawn by	JTB
Checked by	JTB

ROOM FINISH SCHEDULE

A603

Scale: AS SHOWN

STRUCTURAL NOTES

GENERAL:

STRUCTURAL DRAWINGS SHALL BE USED IN CONJUNCTION WITH JOB SPECIFICATIONS AND ARCHITECTURAL, MECHANICAL, ELECTRICAL, PLUMBING, AND SITE DRAWINGS. CONSULT THESE DRAWINGS FOR DEPRESSIONS, AND OTHER DETAILS NOT SHOWN ON STRUCTURAL DRAWINGS.

DIMENSIONS AND CONDITIONS MUST BE VERIFIED IN THE FIELD. ANY DISCREPANCIES SHALL BE BROUGHT TO THE ATTENTION OF THE ENGINEER BEFORE PROCEEDING WITH THE AFFECTED PART OF THE WORK.

THE STRUCTURE IS DESIGNED TO BE SELF–SUPPORTING AND STABLE AFTER THE BUILDING IS COMPLETE. IT IS THE CONTRACTOR'S RESPONSIBILITY TO DETERMINE ERECTION PROCEDURES AND SEQUENCE TO INSURE SAFETY OF THE BUILDING AND ITS COMPONENTS DURING ERECTION. THIS INCLUDES THE ADDITION OF NECESSARY SHORING, SHEETING, TEMPORARY BRACING, GUYS OR TIEDOWNS.

CONTRACTOR PROPOSED CHANGES AND SUBSTITUTIONS:

PROPOSED CHANGES OR SUBSTITUTIONS TO STRUCTURAL DETAILS OR PLANS SHALL BE SUBMITTED TO THE ENGINEER OF RECORD (EOR) FOR REVIEW AND APPROVAL. SUBMITTALS SHALL CONTAIN FULL DOCUMENTATION OF CHANGES OR SUBSTITUTIONS.

DESIGN LOADS:

THE STRUCTURAL SYSTEM FOR THIS BUILDING HAS BEEN DESIGNED IN ACCORDANCE WITH THE INTERNATIONAL BUILDING CODE(IBC) 2021
FOLLOWING SUPERIMPOSED LOADINGS HAVE BEEN UTILIZED:

ROOF LIVE LOAD: 20 PSF
FLOOR LIVE LOAD: 50 PSF
CISTERN TOP SLAB: 50 PSF
MEZZANINE LIVE LOAD: 250 PSF (HEAVY STORAGE)
WIND: ASCE 7–02
165 MPH REGION
EXPOSURE 'C'
CATEGORY IV
IMPORTANCE FACTOR, I = 1.15

EARTHQUAKE LOAD IS BASED ON THE FOLLOWING CRITERIA:

Sds – NOT AVAILABLE (NO AVAILABLE GEOTECH REPORT)
Sd1 – NOT AVAILABLE (NO AVAILABLE GEOTECH REPORT)
SITE CLASS – D
OCCUPANCY CATEGORY – IV
SEISMIC DESIGN CATEGORY – D
RESPONSE MODIFICATION COEF. – NOT AVAILABLE (NO AVAILABLE GEOTECH REPORT)

SHOP DRAWING REVIEW:

SHOP DRAWINGS WILL BE REVIEWED FOR GENERAL COMPLIANCE WITH THE DESIGN INTENT OF THE CONTRACT DOCUMENTS ONLY. IT SHALL BE THE RESPONSIBILITY OF THE CONTRACTOR TO VERIFY COMPLIANCE WITH THE CONTRACT DOCUMENTS AS TO QUANTITY, LENGTH, ELEVATIONS, DIMENSIONS, ETC.

SHOP DRAWING SUBMITTALS SHALL INCLUDE ONE GOOD QUALITY REPRODUCIBLE AND THREE SETS OF BLUEPRINTS. ONE SET OF PRINTS WILL BE RETAINED BY THE ENGINEER, ONE BY THE LOCAL BUILDING DEPARTMENT (WHERE REQUIRED) AND THE CONTRACTOR SHALL MAKE PRINTS FROM THE REPRODUCIBLES AS REQUIRED FOR DISTRIBUTION. ENGINEER'S REVIEW STAMP WILL BE PROVIDED TO CONTRACTOR IN ELECTRONIC FORMAT AND SHALL BE APPLIED TO ALL DRAWINGS PRIOR TO SUBMITTAL.

THE CONTRACT DOCUMENTS WILL GOVERN OVER THE SHOP DRAWINGS UNLESS OTHERWISE SPECIFIED IN WRITING BY THE ENGINEER.

CHANGES AND ADDITIONS MADE ON RE–SUBMITTALS SHALL BE CLEARLY FLAGGED AND NOTED. THE PURPOSE OF THE RE–SUBMITTALS SHALL BE CLEARLY NOTED ON THE LETTER OF TRANSMITTAL. ARCHITECT/ENGINEER REVIEW WILL BE LIMITED TO THOSE ITEMS CAUSING THE RE–SUBMITTAL.

SHOP DRAWING SUBMITTALS ARE REQUIRED FOR ALL FRAMING SHOWN ON THESE DRAWINGS INCLUDING, BUT NOT LIMITED TO: CONCRETE MIXES, CONCRETE AND MASONRY REINFORCING, STRUCTURAL STEEL AND CONNECTIONS, STEEL DECK, LIGHT GAGE FRAMING, WOOD ROOF TRUSS/RAFTER FRAMING

FOUNDATIONS:

FOUNDATION DESIGN IS BASED ON AN ASSUMED SOIL BEARING PRESSURE OF 3,000 PSF (NO AVAILABLE GEOTECH REPORT)

FORMWORK AND SHORING:

NO STRUCTURAL CONCRETE SHALL BE STRIPPED UNTIL IT HAS REACHED AT LEAST TWO THIRDS OF THE 28 DAY DESIGN STRENGTH. DESIGN, ERECTION AND REMOVAL OF ALL FORMWORK, SHORES AND RESHORES SHALL MEET REQUIREMENTS SET FORTH IN ACI STANDARDS 347 AND 301.

REINFORCING STEEL:

SHALL BE ASTM A615 GRADE 60 DEFORMED BARS, FREE FROM OIL, SCALE AND RUST AND PLACED IN ACCORDANCE WITH THE TYPICAL BENDING DIAGRAM AND PLACING DETAILS OF ACI STANDARDS AND SPECIFICATIONS. SECURE APPROVAL OF SHOP DRAWINGS PRIOR TO COMMENCING FABRICATION.

AT CORNERS OF CONCRETE WALLS, BEAMS AND CONTINUOUS WALL FOOTINGS, PROVIDE MATCHING HORIZONTAL BARS X 5'–0" BENT BAR FOR EACH HORIZONTAL BAR SCHEDULED AT EACH FACE.

WHERE COLUMNS ARE AN INTEGRAL PART OF CONCRETE WALLS, WALL REINFORCEMENT SHALL BE CONTINUOUS THRU THE COLUMNS.

ALL HOOKS SHOWN IN REINFORCEMENT SHALL BE ACI RECOMMENDED HOOKS UNLESS OTHERWISE NOTED.

FOR BALCONIES, SLABS AND WALKWAYS EXPOSED TO WEATHER ALL REINFORCING STEEL (TOP AND BOTTOM) AS WELL AS SPACERS AND OTHER DEVICES FOR SPACING, SUPPORTING AND FASTENING REINFORCING SHALL BE GALVANIZED CONFORMING TO ASTM A767. BOLSTERS AND CHAIRS TO BE PLASTIC. CONCRETE PLACED IN THESE AREAS TO HAVE .40 W/C RATIO MAXIMUM AND CONTAIN 2.5 GALLONS OF CALCIUM NITRATE PER CUBIC YARD. REBAR COVER TO BE 1.5" MINIMUM.

ALL DIMENSIONS SHOWING THE LOCATION OF REINFORCING STEEL NOT NOTED AS "CLEAR" OR "CLR." ARE TO CENTER OF STEEL. CLEAR COVER FOR NON–PRESTRESSED CONCRETE REINFORCING SHALL BE AS NOTED BELOW, U.N.O. ON PLANS OR DETAILS.

EXPOSURE CONDITION:	COVER:
CAST AGAINST AND PERMANENTLY EXPOSED TO EARTH	3"
EXPOSED TO EARTH OR WEATHER (INCLUDES SLABS ON GRADE)	
NO. 5 AND SMALLER	1–1/2"
NO. 6 AND LARGER	2"
NOT EXPOSED TO WEATHER OR IN CONTACT WITH GROUND	
STRUCTURAL SLABS, WALLS, JOISTS	
NO. 11 AND SMALLER	3/4"
BEAMS, COLUMNS (PRIMARY REINFORCEMENT, TIES, STIRRUPS, SPIRALS)	1 1/2"

WELDED WIRE FABRIC:

TO CONFORM TO ASTM A 185, FREE FROM OIL, SCALE AND RUST AND PLACED IN ACCORDANCE WITH THE TYPICAL PLACING DETAILS OF ACI STANDARDS AND SPECIFICATIONS. MINIMUM LAP SHALL BE ONE SPACE PLUS TWO INCHES. USE OF FLAT MANUFACTURED SHEETS IS RECOMMENDED.

CONCRETE:

SHALL BE PER AN APPROVED MIX DESIGN PROPORTIONED TO ACHIEVE A STRENGTH AT 28 DAYS AS LISTED BELOW WITH A PLASTIC AND WORKABLE MIX:

3000 PSI FOR FOUNDATIONS AND SLABS ON GRADE, TIE–BEAMS AND TIE COLUMNS.

3500 PSI FOR STRUCTURAL BEAMS AND COLUMNS AS INDICATED.

CONCRETE SHALL BE PLACED AND CURED ACCORDING TO ACI STANDARDS AND SPECIFICATIONS.

SUBMIT PROPOSED MIX DESIGN WITH RECENT FIELD CYLINDER OR LAB TESTS FOR REVIEW PRIOR TO USE. MIX SHALL BE UNIQUELY IDENTIFIED BY MIX NUMBER OR OTHER POSITIVE IDENTIFICATION. MIX SHALL MEET THE REQUIREMENTS OF ASTM C33 FOR COARSE AGGREGATE. CONCRETE SHALL COMPLY WITH THE REQUIREMENTS OF ASTM STANDARD C94 FOR MEASURING, MIXING, TRANSPORTING, ETC. CONCRETE TICKETS SHALL BE TIME STAMPED WHEN CONCRETE IS BATCHED. THE MAXIMUM TIME ALLOWED FROM THE TIME THE MIXING WATER IS ADDED UNTIL IT IS DEPOSITED IN ITS FINAL POSITION SHALL NOT EXCEED ONE AND ONE HALF (1 1/2) HOURS. IF FOR ANY REASON THERE IS A LONGER DELAY THAN THAT STATED ABOVE, THE CONCRETE SHALL BE DISCARDED. SLABS SHALL BE CURED USING A DISSIPATING CURING COMPOUND MEETING ASTM STANDARD C309 TYPE 1–D AND SHALL HAVE A FUGITIVE DYE. THE COMPOUND SHALL BE PLACED AS SOON AS THE FINISHING IS COMPLETED OR AS SOON AS THE WATER HAS LEFT THE UNFINISHED CONCRETE. SCUFFED OR BROKEN AREAS IN THE CURING MEMBRANE SHALL BE RECOATED DAILY. CALCIUM CHLORIDES SHALL NOT BE UTILIZED; OTHER ADMIXTURES MAY BE USED ONLY WITH THE APPROVAL OF THE ENGINEER.

CONCRETE MIX DESIGNS SHALL INCLUDE A WRITTEN DESCRIPTION INDICATING WHERE EACH PARTICULAR MIX IS TO BE PLACED WITHIN THE STRUCTURE. IF ACCEPTED, PEA ROCK PUMP MIX USE IS LIMITED TO VERTICAL ELEMENT POURS AND BEAM POURS LESS THAN 60 LINEAL FEET PER POUR.

CONCRETE DESIGN MIX SUBMITTALS SHALL INCLUDE TESTED, STATISTICAL BACK UP DATA AS PER CHAPTER 5 OF ACI 318.

ALL CONCRETE SHALL BE NORMAL WEIGHT OF 145 POUNDS PER CUBIC FOOT USING HARD ROCK AGGREGATES CONFORMING TO ASTM C33 U.N.O. LARGEST NOMINAL AGGREGATE SIZE SHALL BE 1–1/2" OR GREATER FOR SLABS ON GRADE AND 3/4" OR GREATER FOR ALL OTHER CONCRETE U.N.O.

PORTLAND CEMENT SHALL CONFORM TO ASTM C150. TYPE V CEMENT SHALL BE USED FOR CONCRETE IN CONTACT WITH EARTH. TYPE II CEMENT MAY BE USED ELSEWHERE.

MAX. SLUMP SHALL BE 5 INCHES. MIX WATER SHALL BE CLEAN AND POTABLE.

POST–INSTALLED ANCHORS:

1. POST–INSTALLED ANCHORS SHALL ONLY BE USED WHERE SPECIFIED ON THE DRAWINGS.

2. CONTRACTOR SHALL OBTAIN APPROVAL FROM ENGINEER OF RECORD PRIOR TO USING POST–INSTALLED ANCHORS FOR MISSING OR MISPLACED CAST–IN–PLACE ANCHORS.

3. CARE SHALL BE GIVEN TO AVOID CONFLICTS WITH EXISTING REBAR WHEN DRILLING HOLES. HOLES SHALL BE DRILLED AND CLEANED PER THE MANUFACTURER'S INSTRUCTIONS.

4. UNLESS SPECIFIED OTHERWISE, ANCHORS SHALL BE EMBEDDED IN THE APPROPRIATE SUBSTRATE WITH A MINIMUM EMBEDMENT OF 8 TIMES THE NOMINAL ANCHOR DIAMETER OR THE EMBEDMENT REQUIRED TO SUPPORT THE INTENDED LOAD. ANCHORS SHALL BE INSTALLED PER THE MANUFACTURER'S INSTALLATION INSTRUCTIONS AT NOT LESS THAN MINIMUM EDGE DISTANCE AND/OR SPACINGS INDICATED IN THE MANUFACTURER'S LITERATURE.

5. SUBSTITUTION REQUESTS, FOR PRODUCTS OTHER THAN THOSE LISTED BELOW, SHALL BE SUBMITTED TO THE ENGINEER WITH CALCULATIONS THAT ARE PREPARED & SEALED BY A REGISTERED PROFESSIONAL ENGINEER SHOWING THAT THE SUBSTITUTED PRODUCT WILL ACHIEVE AN EQUIVALENT CAPACITY USING THE APPROPRIATE DESIGN PROCEDURE REQUIRED BY THE BUILDING CODE.

6. ACCEPTABLE PRODUCTS ARE:
   A. EXPANSION ANCHORS FOR NON–CRACKED CONCRETE ONLY:
      - WEDGE–ALL (WA), BY SIMPSON STRONG–TIE
      - KWIK BOLT 3, BY HILTI
   B. CRACKED CONCRETE MECHANICAL ANCHORS:
      - STRONG–BOLT (STB), BY SIMPSON STRONG–TIE
      - KWIK BOLT (TZ), BY HILTI
   C. SCREW ANCHORS:
      - TITEN HD (THD), BY SIMPSON STRONG–TIE
      - HUS–H, BY HILTI
   D. ADHESIVE ANCHORS:
      a) FOR ANCHORING INTO SOLID BASE MATERIAL (CONCRETE AND GROUT–FILLED CMU):
         - ACRYLIC–TIE (AT)
         - SET EPOXY–TIE (SET) WITH RETROFIT BOLTS (RFB), BY SIMPSON STRONG–TIE
         - HIT RE 500, BY HILTI
      b) FOR ANCHORING INTO HOLLOW BASE MATERIAL (HOLLOW CMU):
         - CONTACT ENGINEER OF RECORD

MASONRY WALLS:

PROVIDE HOT DIPPED GALVANIZED LADDER TYPE HORIZONTAL JOINT REINFORCEMENT (9 GA.) AT 16" ON CENTER VERTICAL IN ALL MASONRY WALLS. PROVIDE DOVE TAIL SLOT ANCHORS AT CONCRETE COLUMNS.

BLOCK CELLS SHALL BE GROUT FILLED WITH VERTICAL REINFORCING BARS AT CORNERS, INTERSECTIONS, WALL ENDS, EACH SIDE OF OPENINGS, AND AS SHOWN ON THE PLANS. DOWELS SHALL BE USED TO PROVIDE CONTINUITY INTO THE STRUCTURE ABOVE AND/OR BELOW, UNLESS NOTED OTHERWISE. USE METAL LATH, MORTAR, OR SPECIAL UNITS TO CONFINE CONCRETE AND GROUT TO AREA REQUIRED. MASONRY SHALL BE LAID IN RUNNING BOND PATTERN UNLESS NOTED OTHERWISE. INTERSECTING WALLS SHALL BE INTERLOCKED WITH TIE COLUMNS "TC" OR STRUCTURAL COLUMNS "C" AS NOTED ON THE PLANS.

MASONRY UNITS SHALL MEET ASTM C 90 FOR HOLLOW LOAD BEARING TYPE MASONRY WITH UNIT STRENGTH OF 1900 psi ON THE NET AREA (f'm = 1500 PSI). MORTAR SHALL BE TYPE "M" OR "S" AND MEET ASTM C 270. GROUT SHALL BE 2000 PSI MINIMUM COMPRESSIVE STRENGTH AND MEET ASTM C 476. PROVIDE HOOKED DOWELS IN FOOTINGS FOR VERTICAL REINFORCING ABOVE. LAP SPLICES 48 BAR DIAMETERS.

SUBMIT PROPOSED GROUT MIX DESIGN FOR REVIEW PRIOR TO USE. MIX SHALL BE UNIQUELY IDENTIFIED BY MIX NUMBER OR OTHER POSITIVE IDENTIFICATION. GROUT SLUMP SHALL BE BETWEEN 8 AND 11 INCHES. USE OF SUPERPLASTICIZER IS PROHIBITED.

CELLS TO BE GROUT FILLED SHALL HAVE VERTICAL ALIGNMENT SUFFICIENT TO MAINTAIN A CLEAR, UNOBSTRUCTED, CONTINUOUS VERTICAL GROUT SPACE. CLEANOUT OPENINGS SHALL BE PROVIDED AT THE BOTTOM OF CELLS TO BE GROUT FILLED IN EACH POUR IN EXCESS OF 5 FEET IN HEIGHT. ANY OVERHANGING MORTAR OR OTHER OBSTRUCTION OR DEBRIS SHALL BE REMOVED FROM THE INSIDES OF SUCH CELL WALLS. THE CLEANOUTS SHALL BE SEALED BEFORE GROUTING, AFTER INSPECTION.

FOR JOINT REINFORCEMENT, WALL TIES, ANCHORS AND INSERTS, APPLY A MINIMUM COAT OF 1.5 OUNCES PER SQUARE FOOT (PSF) (458/G/M2) COMPLY WITH THE REQUIREMENTS OF ASTM A153, CLASS B.

VERTICAL REINFORCEMENT SHALL BE HELD IN POSITION AT TOP AND BOTTOM AND AT INTERVALS NOT EXCEEDING 192 BAR DIAMETERS. CELLS CONTAINING REINFORCEMENT SHALL BE FILLED SOLIDLY WITH GROUT. GROUT SHALL BE POURED IN LIFTS OF 4 FEET MAXIMUM HEIGHT. GROUT SHALL BE CONSOLIDATED AT TIME OF PLACING BY VIBRATING AND RECONSOLIDATED LATER BY VIBRATING BEFORE PLASTICITY IS LOST.

WHEN TOTAL GROUT POUR EXCEEDS 5 FEET IN HEIGHT, THE GROUT SHALL BE PLACED IN 4 FOOT LIFTS. MINIMUM CELL DIMENSION SHALL BE IN ACCORDANCE WITH TABLE 5 OF ACI 530.1 (3" X 3" FOR COARSE GROUT, 12 FT. MAXIMUM POUR HEIGHT).

WHEN THE GROUTING IS STOPPED FOR ONE HOUR OR LONGER, HORIZONTAL CONSTRUCTION JOINTS SHALL BE MADE BY STOPPING THE POUR OF GROUT NOT LESS THAN 1–1/2 INCH BELOW THE TOP OF THE UPPERMOST UNIT GROUTED.

MINIMUM LAP SPLICES FOR REINFORCED CMU PER 2007 FBC WITH 2009 SUPPLEMENTS SECTION 2107:

BAR SIZE			
#4	#5	#6	#7
24"	30"	36"	66"

LAP SPLICES THAT OCCUR AT CANTILEVERED WALLS SUCH AS: PARAPETS, RETAINING WALLS, ETC. SHALL HAVE LAP SPLICE LENGTHS INCREASED BY 50% TO 72 BAR DIAMETERS.

TIE BEAMS:

BEAMS WITH THE PREFIX "TB" AND/OR "*" SHALL BE OF CONCRETE, POURED AFTER THE BLOCK WALLS BELOW ARE IN PLACE. REINFORCING SHALL BE CONTINUOUS THROUGH TIE BEAMS WITH MINIMUM LAP SPLICES OF 48 BAR DIAMETERS AND BENT BARS AT CORNERS. USE METAL LATH, MORTAR, OR SPECIAL UNITS TO CONFINE CONCRETE TO AREA REQUIRED, IN ACCORDANCE WITH ACI 530.1 (SOLID METAL OR FELT CAVITY CAPS ARE PROHIBITED).

LINTELS & SILLS:

MASONRY OPENINGS LESS THAN 12 FEET SHALL BE SPANNED WITH 16" DEEP CONCRETE LINTELS WITH 2#5 REINFORCING BARS TOP AND BOTTOM. MASONRY OPENINGS LESS THAN 8 FEET SHALL BE SPANNED WITH 12" DEEP CONCRETE LINTELS WITH 2#5 REINFORCING BARS TOP AND BOTTOM. MASONRY OPENINGS LESS THAN 6 FEET SHALL BE SPANNED WITH 8" DEEP CONCRETE LINTELS WITH 2#5 REINFORCING BARS BOTTOM. LINTELS SHALL BEAR A MINIMUM OF 8" AT EACH END.

PROVIDE 8" X 8" MASONRY BEAM WITH 2 #5 CONT. AT EVERY WINDOW SILL. EXTEND BEAM 8" BEYOND EDGE OF OPENING.

STRUCTURAL STEEL:

ROLLED SHAPES SHALL CONFORM TO ASTM A–572 OR A–992 GRADE 50 AND "THE SPECIFICATION FOR DESIGN, FABRICATION AND ERECTION OF STRUCTURAL STEEL FOR BUILDINGS" BY THE AMERICAN INSTITUTE OF STEEL CONSTRUCTION, INC. SHOP CONNECTIONS TO BE WELDED (UTILIZING E70XX ELECTRODES) AND FIELD CONNECTIONS TO BE BOLTED, UNLESS OTHERWISE NOTED ON STRUCTURAL DRAWINGS. STEEL SHALL RECEIVE ONE SHOP COAT AND ONE FIELD TOUCH UP COAT OF APPROVED RUST INHIBITIVE PAINT, EXCEPT WHERE GALVANIZING IS INDICATED ON THE DRAWINGS.

STRUCTURAL TUBING SHALL CONFORM TO ASTM A 500, GRADE B, Fy = 46 KSI. STRUCTURAL PIPE SHALL CONFORM TO ASTM A 53 GRADE B, TYPE E OR S, Fy = 35 KSI. BEAM CONNECTIONS TO TUBE COLUMNS SHALL BE A.I.S.C. THRU–PLATE TYPE UNLESS SHOWN OTHERWISE.

BOLTED CONNECTIONS SHALL CONSIST OF MINIMUM 3/4 INCH DIAMETER ASTM A 325–N HIGH STRENGTH BOLTS. CONNECTIONS SHALL NOT HAVE LESS THAN 2 ROWS OF BOLTS. ANCHOR BOLTS SHALL CONFORM TO ASTM A 307 OR A 36 (THREADED ROD). ALL BOLTED CONNECTIONS SHALL BE VISUALLY INSPECTED. TWENTY FIVE PERCENT OF ALL SLIP CRITICAL BOLTED CONNECTIONS SHALL BE TESTED.

ASTM SPECIFICATION A 36 FOR MISCELLANEOUS STEEL SHAPES (ANGLES, PLATES, ETC.).

STEEL BEAMS SHALL HAVE THE FOLLOWING CAMBERS UNDER THEIR OWN WEIGHTS:

40' SPAN OR LESS – CAMBER = 0

STRUCTURAL STEEL BOLTS, ANCHORS, ETC., SHALL CONFORM TO THE FOLLOWING STANDARDS AND MATERIAL PROPERTIES U.N.O:

COMPONENT:	STANDARD:	Fy:
BOLTS	ASTM A325	–––
	OR ASTM A490 WHERE NOTED	–––
NUTS	ASTM A563	–––
WASHERS	ASTM F436	–––
ANCHOR RODS	ASTM F1554, GRADE 36	36 KSI
	OR GRADE 55 WHERE NOTED	55 KSI
	(GRADE 55 RODS SHALL COMPLY WITH WELDABILITY SUPPLEMENT S1)	
WASHERS (AT ANCHOR RODS)	ASTM A36	36 KSI
	OR ASTM F844 (USS STANDARD)	–––
	(F844 WASHERS PERMITTED ONLY FOR 3/4" DIA. RODS AT 1 1/16" MAX. DIA. HOLES IN BASE PLATE WHERE NO WELD REQ'D. BETWEEN WASHER AND BASE PLATE)	

ALL BOLTS SHALL BE INSTALLED AS BEARING–TYPE CONNECTIONS WITH THREADS EXCLUDED FROM SHEAR PLANE (TYPE "X" CONNECTION) U.N.O. HIGH–STRENGTH BOLT ASSEMBLIES SHALL BE IN ACCORDANCE WITH THE RCSC "SPECIFICATION FOR STRUCTURAL JOINTS USING ASTM A325 OR A490 BOLTS" AND SHALL BE SNUG TIGHTENED USING ANY AISC APPROVED METHOD U.N.O. ALL BOLTS IN SLOTTED OR OVERSIZED HOLES AND ALL HIGH–STRENGTH BOLTS SHALL BE INSTALLED WITH HARDENED WASHERS.

ALL CONNECTIONS INVOLVING WOOD MEMBERS, INCLUDING THOSE WITH THREADED ROD, THREADED STUDS, FOUNDATION ANCHOR BOLTS, THRU–BOLTS, ETC., SHALL USE ASTM A307 MATERIAL U.N.O. ALL BOLTS, ANCHOR BOLTS, EXPANSION BOLTS, ETC., SHALL BE INSTALLED WITH STEEL WASHERS AT FACE OF WOOD.

SHEAR STUD CONNECTORS:

SHEAR STUD CONNECTORS SHALL BE FABRICATED AND INSTALLED IN ACCORDANCE WITH AWS D1.1 "STRUCTURAL WELDING CODE", SECTION 7 STUD WELDING. WHERE STUDS ARE PART OF A COMPOSITE FLOOR SYSTEM, STUD WELDING SHALL BE BY AUTOMATIC WELDING EQUIPMENT ONLY. HAND WELDING OF STUDS IS NOT ALLOWED. STUDS SHALL BE TYPE 'B', HEADED STUDS HAVING A MINIMUM TENSILE STRENGTH OF 60,000 PSI., AND SHALL BE OF LENGTH AND DIAMETER SHOWN ON STRUCTURAL DRAWINGS.

HEADED STUDS AND AUTOMATIC WELDED DOWELS SHOWN ON PLANS OR DETAILS SHALL BE BY NELSON STUD WELDING, INC., PER ICC ER–2614 AND ICC ER–5217, RESPECTIVELY. STUDS SHALL HAVE FLUXED ENDS AND BE AUTOMATICALLY END–WELDED WITH SUITABLE EQUIPMENT (NO FILLET WELDING OF STUDS PERMITTED U.N.O.) AT SPACINGS INDICATED ON THE PLANS OR DETAILS. WELDING OF STUDS SHALL CONFORM TO THE REQUIREMENTS OF AWS D1.1 AND AWS C5.4. HEADED STUDS AND AUTOMATIC WELDED DOWELS BY OTHER MANUFACTURERS MAY BE SUBSTITUTED PROVIDED THEY ARE OF EQUIVALENT CAPACITY FOR THE INTENDED APPLICATION AND HAVE CURRENT ICC APPROVAL.

WELDING:

WELDING SHALL BE DONE BY WELDERS WITH CURRENT CERTIFICATION USING ASTM E70 SERIES ELECTRODE FOR SHOP WELDING A36 STEEL, AND E70 SERIES LOW HYDROGEN ELECTRODES FOR ALL WELDING OF HIGH STRENGTH STEELS AND FOR FIELD WELDING.

WELDS SHOWN ON STRUCTURAL DRAWINGS ARE MINIMUM DESIGN REQUIREMENTS. THE FABRICATOR'S SHOP DRAWINGS SHALL REFLECT WELDS IN ACCORDANCE WITH AWS REQUIREMENTS.

WELDS SHALL BE VISUALLY INSPECTED WITH 25% ULTRASONIC TESTED UNLESS NOTED OTHERWISE.

PROVIDE FILLET WELDS AT CONTACT POINTS BETWEEN STEEL MEMBERS SUFFICIENT TO DEVELOP THE ALLOWABLE TENSILE STRENGTH OF THE SMALLER MEMBER AT THE JOINT UNLESS DETAILED OTHERWISE ON THE DRAWINGS.

STEEL DECK:

1.5", 20 GA. TYPE VL METAL DECK GALVANIZED AS SHOWN ON ROOF PLAN AS MANUFACTURED BY VULCRAFT/NUCOR OR APPROVED EQUAL. MANUFACTURER SHALL BE A MEMBER OF THE STEEL DECK INSTITUTE. ROOF DECK MUST COMPLY WITH STEEL DECK INSTITUTE STANDARDS. ALL ROOF DECK SHALL BE CONTINUOUS OVER A MINIMUM OF THREE SPANS.

2" METAL DECK IS TO BE ATTACHED TO STRUCTURAL STEEL SUPPORTS WITH 5/8" DIAMETER PUDDLE WELDS (MINIMUM OF 5 WELDS PER SHEET PER BEAM). SIDE JOINTS SHALL BE FASTENED TOGETHER WITH #10 SELF DRILLING SCREWS AT MID SPAN BETWEEN SUPPORTS MINIMUM OF 3 PER SPAN), UNLESS INDICATED OTHERWISE ON THE DRAWINGS.

SUBMITTALS:

SHOP DRAWINGS OR REPORTS FOR THE FOLLOWING ITEMS SHALL BE SUBMITTED TO THE ENGINEER OF RECORD PRIOR TO FABRICATION OR CONSTRUCTION (AS APPLICABLE) U.N.O.

REINFORCING STEEL
MASONRY GROUT AND MORTAR MIX DESIGNS
CONCRETE MIX DESIGNS
ROOF FRAMING PLAN

CONTRACTOR SHALL REVIEW AND STAMP SHOP DRAWINGS PRIOR TO SUBMITTING. CONTRACTOR'S REVIEW SHALL CHECK FOR COMPLETENESS/COMPLIANCE WITH CONTRACT DOCUMENTS.

SHOP DRAWINGS ARE REVIEWED BY ENGINEER ONLY FOR GENERAL COMPLIANCE WITH THE STRUCTURAL DRAWINGS. RESPONSIBILITY FOR CORRECTNESS SHALL REST WITH THE CONTRACTOR. SHOP DRAWINGS DO NOT SUPERSEDE OR REPLACE THE CONTRACT DRAWINGS OR SPECIFICATIONS. CHANGES, SUBSTITUTIONS, OR DEVIATIONS FROM CONTRACT DRAWINGS AND/OR SPECIFICATIONS WILL NOT BE ACCEPTED VIA SHOP DRAWING REVIEW. ALL SUCH MODIFICATIONS SHALL BE SUBMITTED SEPARATELY FOR ENGINEER'S REVIEW.

FOR ALL SUBMITTALS, ANY CORRECTIONS NOTED WILL BE MARKED ON ONE (1) COPY SET ONLY AND RETURNED. ADDITIONAL COPIES OF ANY SUBMITTAL WILL BE RETURNED UNMARKED. CONTRACTOR SHALL BE RESPONSIBLE FOR REPRODUCING ENGINEER'S CORRECTIONS ON ADDITIONAL COPIES REQ'D. ONE COPY SET MAY BE RETAINED FOR THE ENGINEER'S RECORDS. ALLOW FIVE (5) TO TEN (10) WORKING DAYS FOR THE ENGINEER'S REVIEW.

ABBREVIATIONS

AB	– ANCHOR BOLT
ALT	– ALTERNATE
APPROX	– APPROXIMATELY
ARCH	– ARCHITECT
ARCH'L	– ARCHITECTURAL
B/	– BOTTOM OF
BC	– BOTTOM CHORD
BLDG	– BUILDING
BM	– BEAM
BOTT	– BOTTOM
BRG	– BEARING
C/C	– CENTER TO CENTER
CIP	– CAST IN PLACE
CJ	– CONTRACTION JOINT
CL	– CENTERLINE
CLR	– CLEAR
CMU	– CONCRETE MASONRY UNIT
COL	– COLUMN
CONC	– CONCRETE
CONFIG	– CONFIGURATION
CONT	– CONTINUOUS
CONTR	– CONTRACTOR
CTR	– CENTER
DBL	– DOUBLE
DET	– DETAIL
DIA	– DIAMETER
DIM	– DIMENSION
DN	– DOWN
DR	– DOOR/DRAIN
DWG	– DRAWING
EA	– EACH
EE	– EACH END
EF	– EACH FACE
EJ	– EXPANSION JOINT
EL	– ELEVATION
ELEV	– ELEVATION
ENGR	– ENGINEER
EOR	– ENGINEER OF RECORD
EOS	– EDGE OF SLAB
EQ	– EQUAL
EW	– EACH WAY
EXIST	– EXISTING
EXP	– EXPANSION
EXT	– EXTERIOR
FIN	– FINISH
FLR	– FLOOR
FND	– FOUNDATION
FOM	– FACE OF MASONRY
FS	– FAR SIDE
FT	– FOOT
FTG	– FOOTING
GA	– GAGE
GALV	– GALVANIZED
GC	– GENERAL CONTRACTOR
HDG	– HOT DIPPED GALVANIZED
HG	– HIP GIRDER
HK	– HOOK
HORIZ	– HORIZONTAL
HP	– HIGH POINT
HS	– HIGH STRENGTH
IJ	– ISOLATION JOINT
INFO	– INFORMATION
INT	– INTERIOR
IRR	– IRREGULAR
JR	– JAMB REINFORCING
JT	– JOINT
K	– KIP(s)
KIP(s)	– 1000 POUNDS
KLF	– KIPS PER LINEAR FOOT
KJ	– CONSTRUCTION JOINT
L	– ANGLE
LG	– LONG
LLH	– LONG LEG HORIZONTAL
LLV	– LONG LEG VERTICAL
LP	– LOW POINT
LW	– LONG WAY
MFR	– MANUFACTURER
MAS	– MASONRY
MO	– MASONRY OPENING
MAT'L	– MATERIAL
MAX	– MAXIMUM
MECH'L	– MECHANICAL
MTL	– METAL
MIN	– MINIMUM
MISC	– MISCELLANEOUS
NS	– NEAR SIDE
NIC	– NOT IN CONTRACT
NTS	– NOT TO SCALE
OC	– ON CENTER
OH	– OPPOSITE HAND
OPNG	– OPENING
PAF	– POWDER ACTUATED FASTENERS
PART	– PARTITION
PART'L	– PARTIAL
PL	– PLATE
PLF	– POUNDS PER LINEAR FOOT
PSF	– POUNDS PER SQUARE FOOT
PSI	– POUNDS PER SQUARE INCH
PT	– PRESSURE TREATED
R	– RISER/RADIUS
REG	– REGULAR
REINF	– REINFORCING
REM	– REMAINDER
REQ'D	– REQUIRED
REV	– REVISED/REVISION
RM	– ROOM
RO	– ROUGH OPENING
RQMTS	– REQUIREMENTS
SCHED	– SCHEDULE
SECT	– SECTION
SIM	– SIMILAR
SL	– SLOPE
SOG	– SLAB–ON–GRADE
SP	– SPIRAL
SQ	– SQUARE
SS	– STAINLESS STEEL
STD	– STANDARD
STL	– STEEL
STRUCT'L	– STRUCTURAL
SW	– SHEARWALL/SHORT WAY
T/	– TOP OF
TB	– TIE BEAM
TC	– TIE COLUMN
TEMP	– TEMPERATURE
CC	– CONCRETE COLUMN
T/O	– THRU OUT
TR	– TREAD/TRUSS
TYP	– TYPICAL
UNO	– UNLESS NOTED OTHERWISE
VERT	– VERTICAL
W/	– WITH
W/O	– WITHOUT
WD	– WOOD
WP	– WORK POINT
WWF	– WELDED WIRE FABRIC

WIND DESIGN CRITERIA

DESIGN WIND SPEED	165 MPH
BUILDING CLASSIFICATION	IV
IMPORTANCE FACTOR	1.15
EXPOSURE CATEGORY	C
ENCLOSURE CLASSIFICATION	ENCLOSED BUILDING
INTERNAL PRESSURE COEFFICIENT	± 0.18

COMPONENT AND CLADDING WIND PRESSURES

a = 4 FT.

ROOF	NET SURFACE DESIGN PRESSURE (PSF)				
AREA	10 SF.	50 SF.	100 SF.	250 SF.	500 SF.
NEGATIVE ZONE 1	–72.50	–68.21	–66.36	–66.36	–66.36
NEGATIVE ZONE 2	–121.66	–91.60	–78.65	–78.65	–78.65
NEGATIVE ZONE 3	–183.10	–110.09	–78.65	–78.65	–78.65
POSITIVE FOR ALL ZONES	29.49	25.20	23.35	23.35	23.35

WALLS	NET SURFACE DESIGN PRESSURE (PSF)		
AREA	10 SF.	50 SF.	100 SF.
NEGATIVE ZONE 4	–71.89	–65.06	–62.12
NEGATIVE ZONE 5	–88.48	–74.83	–68.95
POSITIVE ZONES 4 & 5	66.36	59.53	56.59

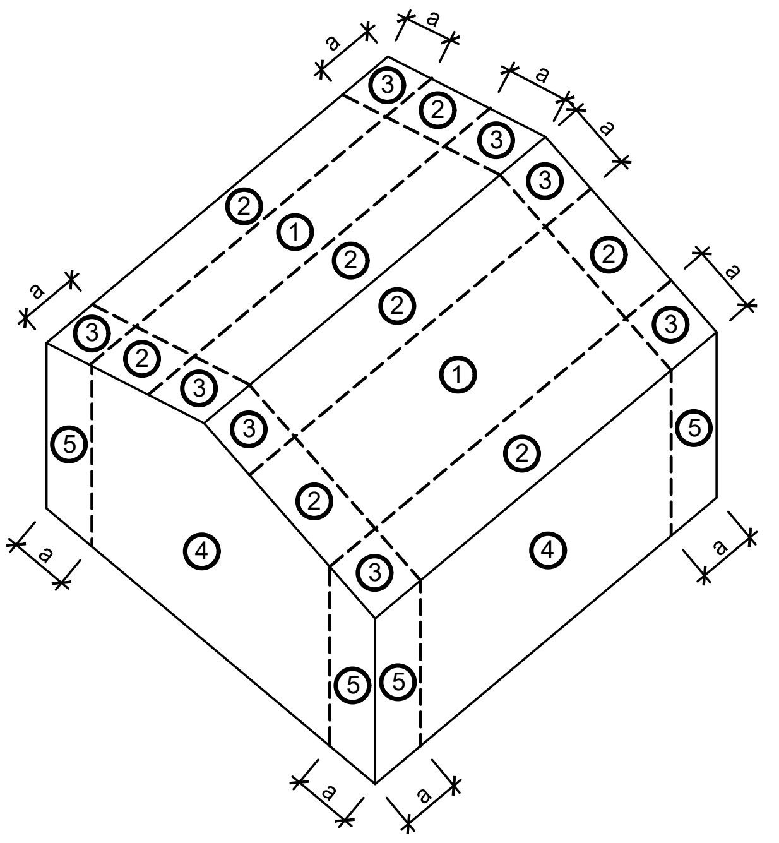

JDG
BOSCHULTE ARCHITECTURE
BUILDTEC

AGENCY:
VIRGIN ISLANDS
DEPARTMENT OF PUBLIC WORKS
6 Susannaberg
Cruz Bay, VI 00830
phone: (340) 776-6346
website: www.dpw.vi.gov

ARCHITECT:
BOSCHULTE ARCHITECTURE, LLC
PO Box 303190
St. Thomas, VI 00803
41-42 Kongens Gade
St. Thomas, VI 00802
phone: (340) 777-2375
e-mail: info@boschulte.com
website: www.boschulte.com

STRUCTURAL ENGINEER:
BUILDTEC, LLC
PO Box 8269
Christiansted, VI 00823
7-1 Bonne Esperance
Christiansted, VI 00820
phone: (340) 513-6918
e-mail: dcartwright@buildteceng.com

DAMIAN CARTWRIGHT 28851–1B

STJ MAINTENANCE BUILDING
FOR
V.I. DEPT. OF PUBLIC WORKS
6 SUSANNABERG
CRUZ BAY, VI 00830

PROGRESS SET

No.	Description	Date
1	100% PERMIT SET	07/06/23

REVISIONS

No.	Description	Date

Project number	
Date	12/20/2022
Drawn by	DC
Checked by	DC

STRUCTURAL NOTES

S001

Scale: AS SHOWN

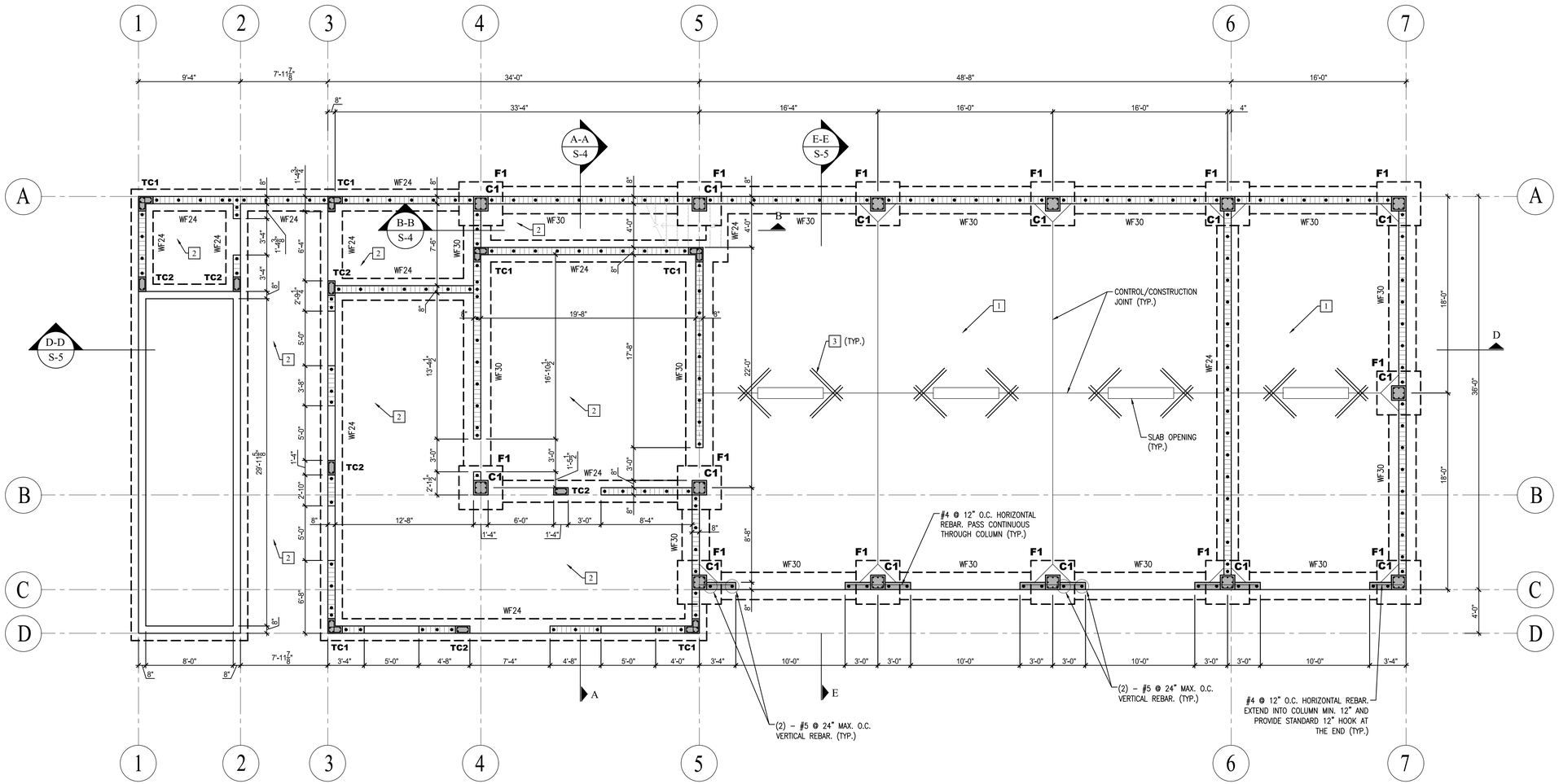

FOUNDATION / GROUND FLOOR PLAN

SCALE: 3/16" = 1'–0"

NOTES:

1. ALL STRUCTURAL STEEL SHALL BE ASTM A–572 GRADE 50 (50 KSI YIELD).
2. ALL REBAR SHALL BE GRADE 60.
3. COORDINATE THIS SHEET WITH ARCHITECTURAL AND M.E.P. DRAWINGS. NOTIFY E.O.R. OF ANY DISCREPANCIES PRIOR TO PROCEEDING.
4. ENGINEER SHALL BE CALLED ONSITE TO INSPECT SUBSURFACE SOIL CONDITIONS PRIOR TO CONSTRUCTING FOOTINGS.

FOOTING SCHEDULE

MARK	SIZE	REINFORCEMENT	REMARKS
WF24	2'–0" CONT. X 12" DEEP	(3)–#5 BOTTOM CONTINUOUS AND #4@12" O.C. TRANSVERSE	
WF30	2'–6" CONT. X 12" DEEP	(4)–#5 BOTTOM CONTINUOUS AND #4@12" O.C. TRANSVERSE	
F1	4'–0" X 4'–0" X 18" DEEP	(6)–#5 EACH WAY EQUALLY SPACED, BOTTOM	

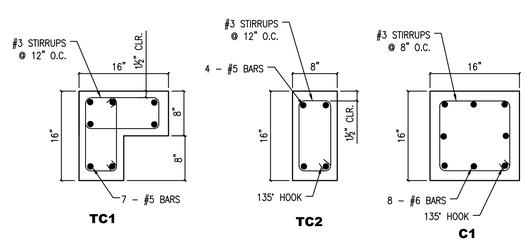

COLUMN SCHEDULE

SCALE: NTS

JOINT SEALING

1. ALL CONCRETE SURFACES AND JOINTS SHALL BE FLUSHED CLEAN WITH WATER AFTER BOTH INITIAL AND FINAL SAW– CUTS, PRIOR TO SAWCUT SLURRY DRYING.
2. AFTER SECOND SAWCUT, JOINT FACES SHALL BE SAND BLASTED AND AIR–BLOWN.
3. SEAL RESERVOIR SHALL BE FORMED USING SECOND SAWCUT. SHOULDERED BLADE SHALL NOT BE USED WITH INITIAL SAWCUT.
4. INSERT TEMPORARY BACKER ROD AFTER INITIAL SAWCUT TO PREVENT DEBRIS INTRUSION.
5. FOR ALL JOINTS THE BACKER ROD MATERIAL SHALL BE COMPATIBLE WITH THE COLD POURED SEALANT AND SLIGHTLY OVERSIZED TO PREVENT MOVEMENT DURING THE JOINT SEALANT OPERATION.
6. TRANSVERSE CONSTRUCTION JOINTS SHALL BE USED ONLY WHEN APPROVED BY THE ENGINEER.

LEGEND

8" C.M.U. WALL REINFORCED WITH 1–#5 VERTICAL REINF. @ 24" O.C. IN GROUTED CELL AND DURO–WALL HORIZONTAL REINF. @ 16" O.C.

8" CONCRETE WALL POURED MONOLITHIC WITH CONCRETE COLUMN. REINFORCE WALL WITH 1–#5 VERTICAL @ 24" O.C. AND #4 HORIZONTAL @ 12" O.C. WHEN WALL IS LOCATED AT BOTH SIDES OF COLUMN, HORIZONTAL REBAR TO PASS CONTINUOUS THROUGH COLUMN. WHEN COLUMN IS LOCATED AT ONE END OF WALL, HORIZONTAL REBAR TO BE EXTENDED MIN. 12" INTO COLUMN WITH A 12" HOOK AT THE END.

1 FLOOR SLAB IN APPARATUS BAYS SHALL BE 6" THICK 4000 PSI CONCRETE REINFORCED WITH 6"X6" W4.0/W4.0 WELDED WIRE FABRIC. PLACE SLAB ON MIN. 10 MIL VAPOR BARRIER AND COMPACTED TERMITE TREATED SUBGRADE.

2 FLOOR SLAB IN OFFICES SHALL BE 5" THICK 4000 PSI CONCRETE REINFORCED WITH 6"X6" W2.9/W2.9 WELDED WIRE FABRIC. PLACE SLAB ON MIN. 10 MIL VAPOR BARRIER AND COMPACTED TERMITE TREATED SUBGRADE.

3 PROVIDE 2 – #4 BARS X 4'–0" LONG AT ALL CORNERS OF SLAB OPENING

JDG
BOSCHULTE ARCHITECTURE
BUILDTEC

AGENCY:
VIRGIN ISLANDS
DEPARTMENT OF PUBLIC WORKS
6 Susannaberg
Cruz Bay, VI 00830
phone: (340) 776-6346
website: www.dpw.vi.gov

ARCHITECT:
BOSCHULTE-ARCHITECTURE, LLC
PO Box 303100
Bronx Terrace, V00803
41-42 Kongens Gade
St. Thomas, V100802
Christiansted, VI 00820
e-mail: info@boschulte.com
website: www.boschulte.com

STRUCTURAL ENGINEER:
BUILDTEC, LLC
PO Box 1689
Christiansted, VI 00823
7-1 Bonne Esperance
Christiansted, VI 00820
phone: (340)513-9918
e-mail: dcartwright@buildtecvi.com

PROFESSIONAL ENGINEER
DAMIAN CARTWRIGHT
28851-1B
VIRGIN ISLANDS

STJ MAINTENANCE BUILDING FOR V.I. DEPT. OF PUBLIC WORKS 6 SUSANNABERG CRUZ BAY, VI 00830

PROGRESS SET

No.	Description	Date
1	100% PERMIT SET	07/06/23

REVISIONS

No.	Description	Date

Project number	
Date	12/20/2022
Drawn by	DC
Checked by	DC

FOUNDATION / GROUND FLOOR PLAN

S002

Scale: AS SHOWN

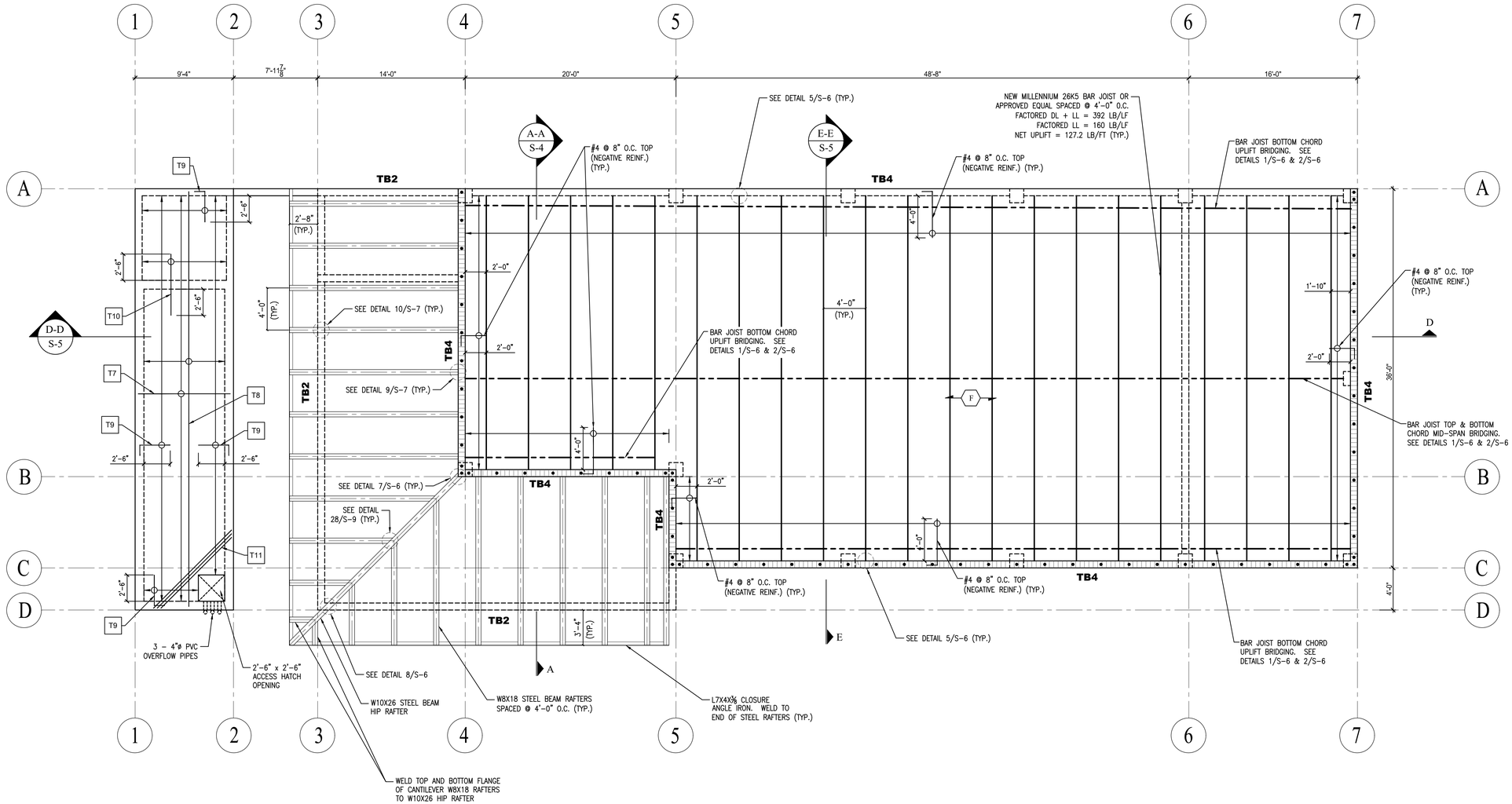

ROOF FRAMING PLAN

SCALE: 3/16" = 1'-0"

CISTERN TOP SLAB

T7	#4 @ 8" O.C. BOTTOM
T8	#4 @ 12" O.C. BOTTOM, TEMP. & SHRINKAGE
T9	#4 @ 12" O.C. TOP WITH ACI STANDARD 90° HOOK AT DISCONTINUOUS END
T10	#4 @ 12" O.C. TOP
T11	PROVIDE 3 – #4 BARS X 9'-6" LONG AT CORNER OF SLAB OPENING

CISTERN NOTES

1. CISTERN CONCRETE TOP SLAB SHALL BE 6" THICK 4,000 PSI., REINFORCED AS SHOWN ON PLANS.
2. CISTERN TOP SLAB DESIGN LOADS:

   DEAD LOAD = 75 PSF
   LIVE LOAD = 50 PSF

NOTES:

1. F — DENOTES SPAN OF 3" NORMAL WEIGHT CONCRETE OVER 1½" DEEP 20 GA. COMPOSITE GALVANIZED STEEL FLOOR DECK. REINFORCE WITH 6"X6" W2.1 X W2.1 WELDED WIRE FABRIC. TOTAL SLAB DEPTH = 4½".
2. ALL STRUCTURAL STEEL SHALL BE ASTM A-572 GRADE 50 (50 KSI YIELD).
3. ALL REBAR SHALL BE GRADE 60.
4. COORDINATE THIS SHEET WITH ARCHITECTURAL AND M.E.P. DRAWINGS. NOTIFY E.O.R. OF ANY DISCREPANCIES PRIOR TO PROCEEDING.

BEAM SCHEDULE

BEAM MARK	SIZE WxH [in]	REINFORCING BOTT.	REINFORCING TOP	STIRRUPS	REMARKS
TB1	8"x24" (MIN.)	2#5	2#5	#3@12" O.C.	1–#5 AT EACH FACE, MIDDLE OF BEAM HEIGHT
TB2	8"x16" (MIN.)	2#5	2#5	#3@12" O.C.	1–#5 AT EACH FACE, MIDDLE OF BEAM HEIGHT. SLOPE TOP TO MATCH ROOF PITCH
TB3	8"x16" (MIN.)	2#5	2#5	#3@12" O.C.	1–#5 AT EACH FACE, MIDDLE OF BEAM HEIGHT.
TB4	8"x24" (MIN.)	2#6	2#6	#3@8" O.C.	1–#6 AT EACH FACE, MIDDLE OF BEAM HEIGHT

NOTES:
1. START STIRRUP SPACING 3" FROM FACE OF SUPPORT.
2. BEAMS NOTED AS 8" & 12" WIDE MAY BE 7⅝" & 11⅝" WIDE (MASONRY DIMENSIONS).
3. SCHEDULED DEPTHS FOR ALL TIE BEAMS ARE MINIMUM DEPTHS. CONTRACTOR MAY INCREASE DEPTHS TO ACCOMMODATE BLOCK COURSING; PROVIDE (1) #5 CONTINUOUS HORIZONTAL EACH FACE FOR EACH 8" INCREMENTAL INCREASE IN DEPTH.

LEGEND

8" C.M.U. WALL REINFORCED WITH 1–#5 VERTICAL REINF. @ 24" O.C. IN GROUTED CELL AND DURO–WALL HORIZONTAL REINF. @ 16" O.C.

BAR JOIST BRIDGING. SEE DETAILS 1 & 2, SHEET S–6.

JDG
BOSCHULTE ARCHITECTURE
BUILDTEC

AGENCY:
VIRGIN ISLANDS
DEPARTMENT OF PUBLIC WORKS
6 Susannaberg
Cruz Bay, VI 00830
phone: (340) 776-6346
website: www.dpw.vi.gov

ARCHITECT:
BOSCHULTE ARCHITECTURE, LLC
PO Box 303100
St. Thomas, VI00803
41-42 Kongens Gade
St. Thomas, VI 00802
Phone: (340) 777-2525
e-mail: info@boschulte.com
website: www.boschulte.com

STRUCTURAL ENGINEER:
BUILDTEC, LLC
PO Box 1000
Christiansted, VI 00823
7-1 Bonne Esperance
Christiansted, VI 00820
phone: (340)513-9918
e-mail: dcartwright@buildtecvi.com

PROFESSIONAL ENGINEER — DAMIAN CARTWRIGHT 28851-18 — VIRGIN ISLANDS

STJ MAINTENANCE BUILDING FOR V.I. DEPT. OF PUBLIC WORKS 6 SUSANNABERG CRUZ BAY, VI 00830

PROGRESS SET

No.	Description	Date
1	100% PERMIT SET	07/06/23

REVISIONS

No.	Description	Date

Project number	
Date	12/20/2022
Drawn by	DC
Checked by	DC

ROOF FRAMING PLAN

S003

Scale: AS SHOWN

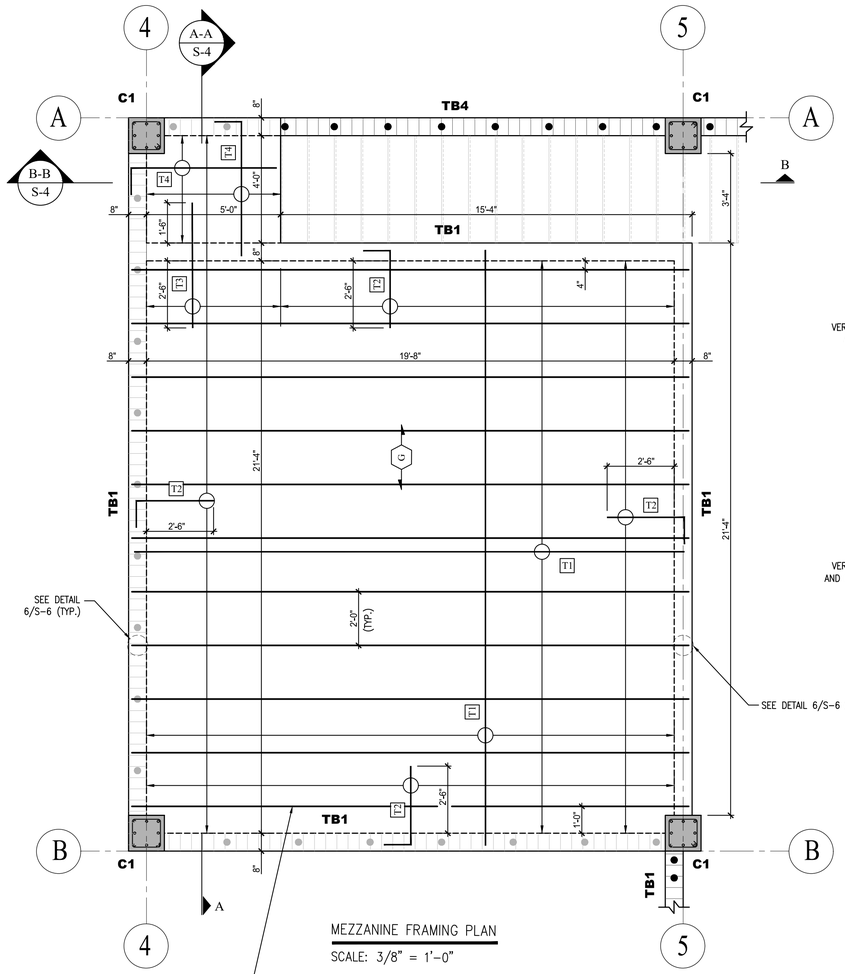

MEZZANINE FRAMING PLAN

SCALE: 3/8" = 1'-0"

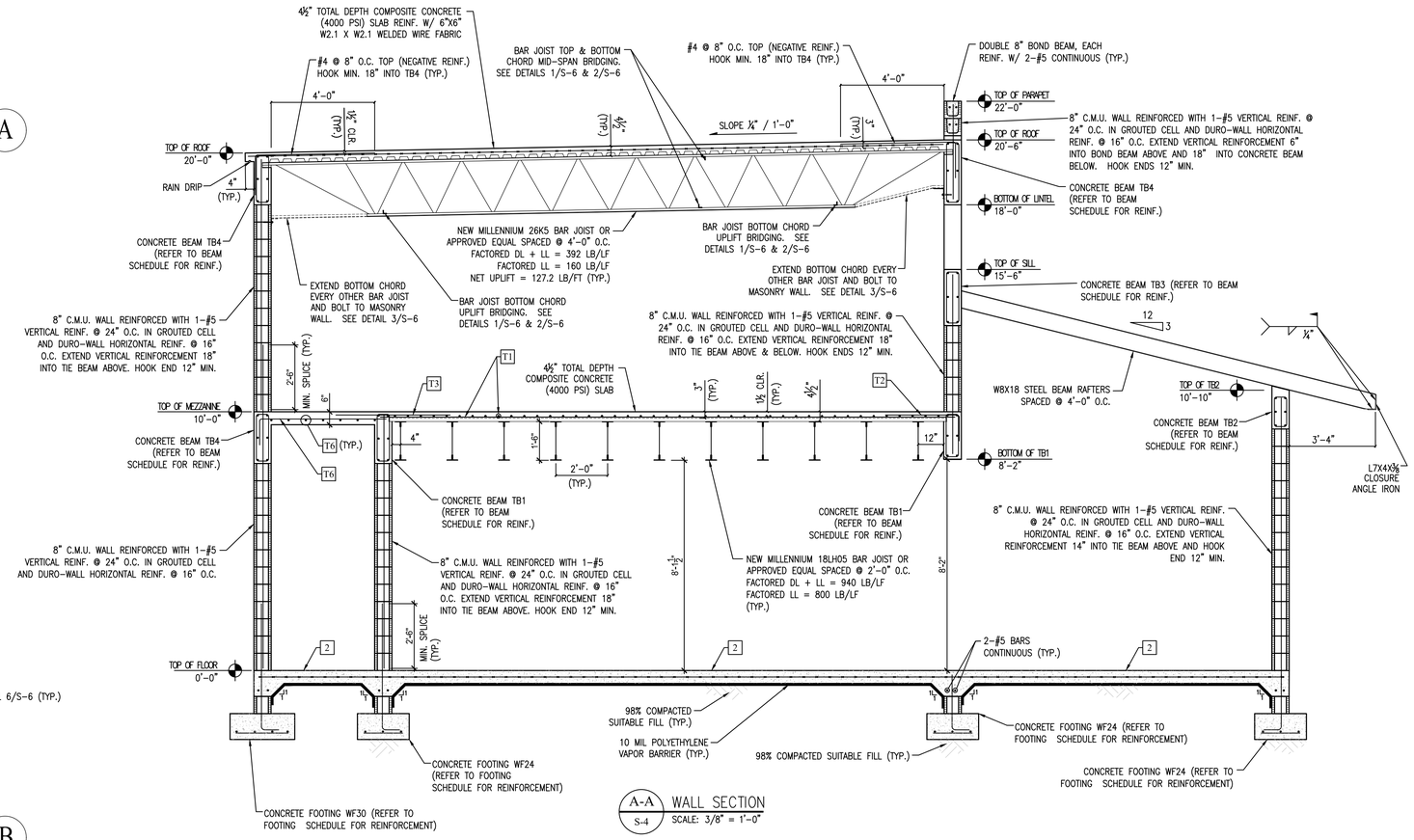

A-A S-4 WALL SECTION

SCALE: 3/8" = 1'-0"

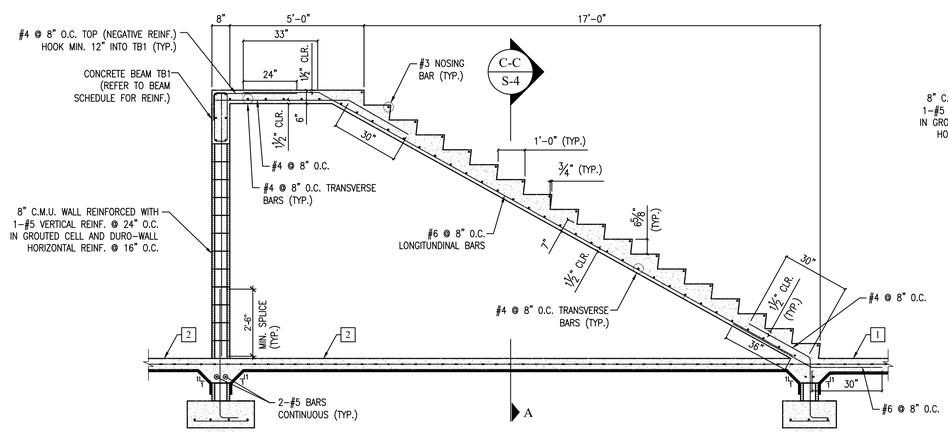

B-B S-4 WALL SECTION

SCALE: 3/8" = 1'-0"

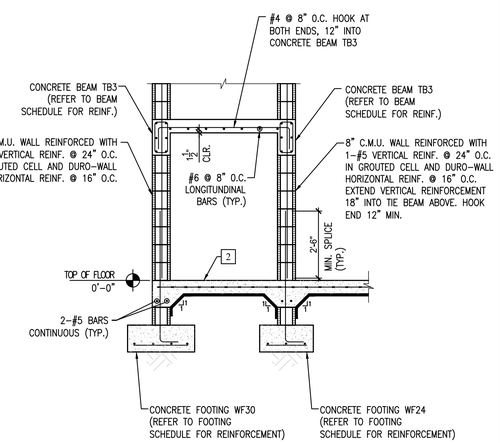

C-C S-4 WALL SECTION

SCALE: 3/8" = 1'-0"

MEZZANINE LEGEND

T1	#3 @ 6" O.C. BOTTOM, EACH WAY
T2	#3 @ 8" O.C. TOP WITH ACI STANDARD 90° HOOK AT DISCONTINUOUS END
T3	#4 @ 12" O.C. TOP
T4	#4 @ 8" O.C. BOTTOM, EACH WAY. PROVIDE ACI STANDARD 90° HOOK AT ENDS INTO TIE BEAM

MEZANINE NOTES

1. MEZZANINE CONCRETE SLAB SHALL BE 4½" TOTAL DEPTH COMPOSITE 4,000 PSI., REINFORCED AS SHOWN ON PLANS.
2. STAIRCASE LANDING SLAB SHALL BE 6" THICK 4,000 PSI., REINFORCED AS SHOWN ON PLANS.
3. MEZZANINE FLOOR DESIGN LOADS:

   SLAB DEAD LOAD = 45 PSF
   JOIST DEAD LOAD = 11.3 LB/FT
   LIVE LOAD = 250 PSF (HEAVY STORAGE)

4. G — DENOTES SPAN OF 3" NORMAL WEIGHT CONCRETE OVER 1½" DEEP 20 GA. COMPOSITE GALVANIZED STEEL FLOOR DECK. REINFORCE WITH #3 REBAR @ 6" O.C. EACH WAY. TOTAL SLAB DEPTH = 4½".
5. ALL STRUCTURAL STEEL SHALL BE ASTM A-572 GRADE 50 (50 KSI YIELD).
6. ALL REBAR SHALL BE GRADE 60.
7. COORDINATE THIS SHEET WITH ARCHITECTURAL AND M.E.P. DRAWINGS. NOTIFY E.O.R. OF ANY DISCREPANCIES PRIOR TO PROCEEDING.

LEGEND

- 8" C.M.U. WALL REINFORCED WITH 1-#5 VERTICAL REINF. @ 24" O.C. IN GROUTED CELL AND DURO-WALL HORIZONTAL REINF. @ 16" O.C.
- 1 — FLOOR SLAB IN APPARATUS BAYS SHALL BE 6" THICK 4000 PSI CONCRETE REINFORCED WITH 6"X6" W4.0/W4.0 WELDED WIRE FABRIC. PLACE SLAB ON MIN. 10 MIL VAPOR BARRIER AND COMPACTED TERMITE TREATED SUBGRADE.
- 2 — FLOOR SLAB IN OFFICES SHALL BE 5" THICK 4000 PSI CONCRETE REINFORCED WITH 6"X6" W2.9/W2.9 WELDED WIRE FABRIC. PLACE SLAB ON MIN. 10 MIL VAPOR BARRIER AND COMPACTED TERMITE TREATED SUBGRADE.

JDG

BOSCHULTE ARCHITECTURE

BUILDTEC

AGENCY:
VIRGIN ISLANDS
DEPARTMENT OF PUBLIC WORKS
6 Susannaberg
Cruz Bay, VI 00830
phone: (340) 776-6346
website: www.dpw.vi.gov

ARCHITECT:
BOSCHULTE ARCHITECTURE, LLC
PO Box 303100
St. Thomas, VI 00803
41-42 Kongens Gade
St. Thomas, VI 00802
Phone: (340) 777-2505
e-mail: info@boschulte.com
website: www.boschulte.com

STRUCTURAL ENGINEER:
BUILDTEC, LLC
PO Box 1000
Christiansted, VI 00823
7-1 Bonne Esperance
Christiansted, VI 00820
phone: (340)513-6918
e-mail: dcartwright@buildtecengi.com

VIRGIN ISLANDS PROFESSIONAL ENGINEER
DAMIAN CARTWRIGHT
28851-1B

STJ MAINTENANCE BUILDING FOR V.I. DEPT. OF PUBLIC WORKS 6 SUSANNABERG CRUZ BAY, VI 00830

PROGRESS SET

No.	Description	Date
1	100% PERMIT SET	07/06/23

REVISIONS

No.	Description	Date

Project number	
Date	12/20/2022
Drawn by	DC
Checked by	DC

MEZZANINE FRAMING PLAN & WALL SECTIONS

S004

Scale: AS SHOWN

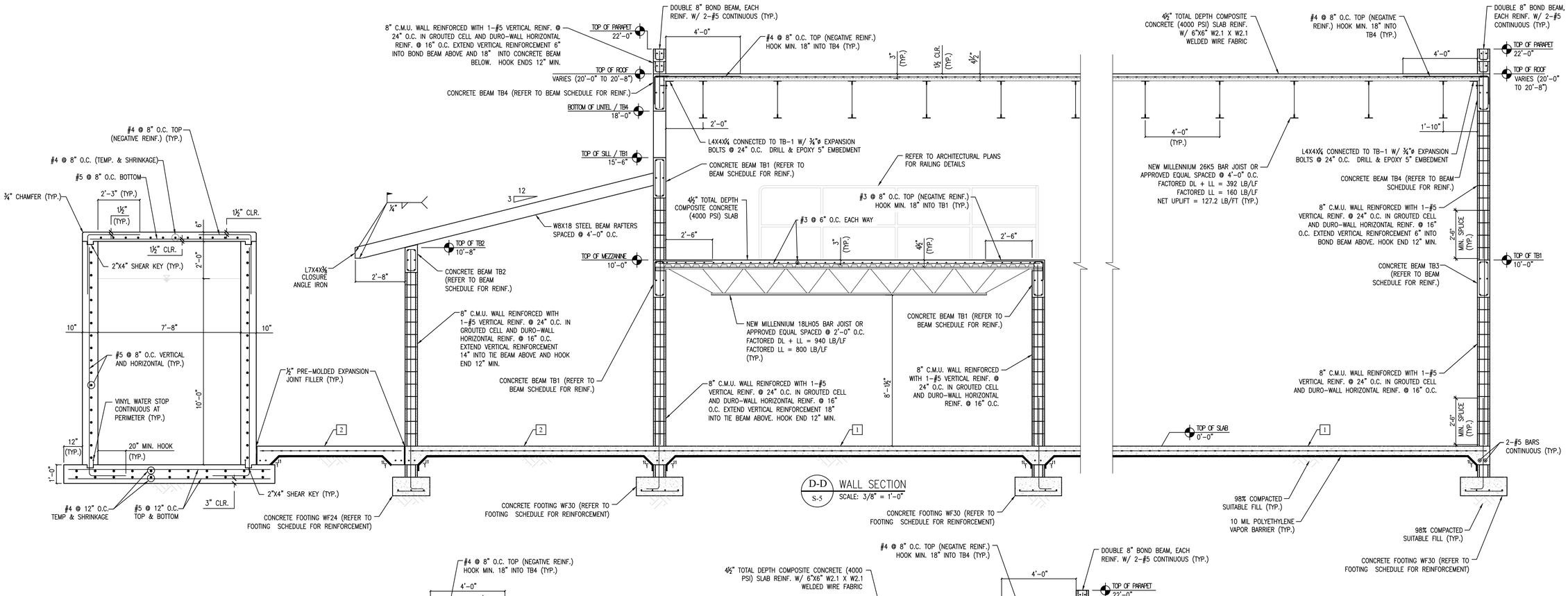

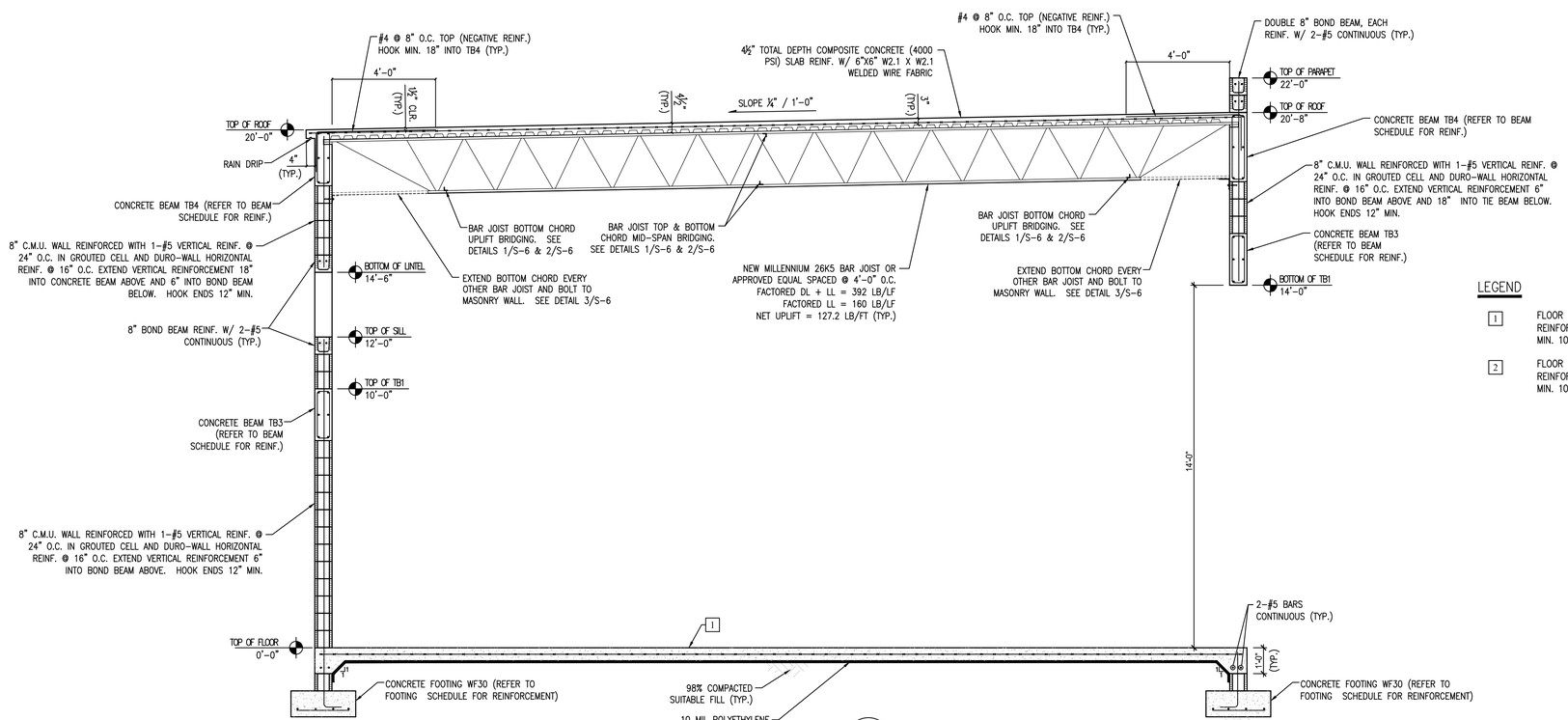

LEGEND

1. FLOOR SLAB IN APPARATUS BAYS SHALL BE 6" THICK 4000 PSI CONCRETE REINFORCED WITH 6"X6" W4.0/W4.0 WELDED WIRE FABRIC. PLACE SLAB ON MIN. 10 MIL VAPOR BARRIER AND COMPACTED TERMITE TREATED SUBGRADE.
2. FLOOR SLAB IN OFFICES SHALL BE 5" THICK 4000 PSI CONCRETE REINFORCED WITH 6"X6" W2.9/W2.9 WELDED WIRE FABRIC. PLACE SLAB ON MIN. 10 MIL VAPOR BARRIER AND COMPACTED TERMITE TREATED SUBGRADE.

JDG
BOSCHULTE ARCHITECTURE
BUILDTEC

AGENCY:
VIRGIN ISLANDS DEPARTMENT OF PUBLIC WORKS
6 Susannaberg
Cruz Bay, VI 00830
phone: (340) 776-6346
website: www.dpw.vi.gov

ARCHITECT:
BOSCHULTE ARCHITECTURE, LLC
PO Box 303100
St. Thomas, VI 00803
41-42 Kongens Gade
St. Thomas, VI 00802
phone: (340) 776-6505
e-mail: info@boschulte.com
website: www.boschulte.com

STRUCTURAL ENGINEER:
BUILDTEC, LLC
PO Box 1000
Christiansted, VI 00823
7-1 Bonne Esperance
Christiansted, VI 00820
phone: (340)513-9918
e-mail: dcartwright@buildtecevg.com

PROFESSIONAL ENGINEER — DAMIAN CARTWRIGHT 28851-18 — VIRGIN ISLANDS

STJ MAINTENANCE BUILDING FOR V.I. DEPT. OF PUBLIC WORKS 6 SUSANNABERG CRUZ BAY, VI 00830

PROGRESS SET

No.	Description	Date
1	100% PERMIT SET	07/06/23

REVISIONS

No.	Description	Date

Project number	
Date	12/20/2022
Drawn by	DC
Checked by	DC

WALL SECTIONS

S005

Scale: AS SHOWN

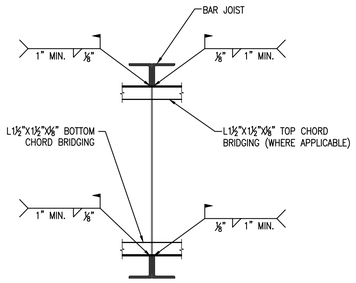

BRIDGING SHALL BE INSTALLED IMMEDIATELY AFTER PLACING BAR JOIST AND PRIOR TO ROOF INSTALLATION

1 / S-6 BAR JOIST BRIDGING

SCALE: N.T.S.

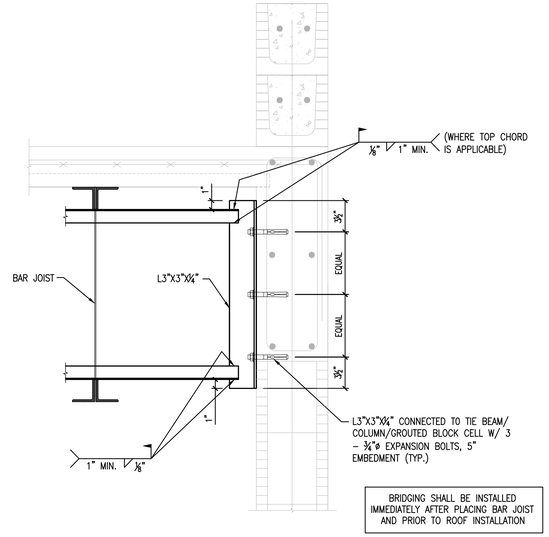

BRIDGING SHALL BE INSTALLED IMMEDIATELY AFTER PLACING BAR JOIST AND PRIOR TO ROOF INSTALLATION

2 / S-6 BAR JOIST BRIDGING CONNECTION TO WALL

SCALE: N.T.S.

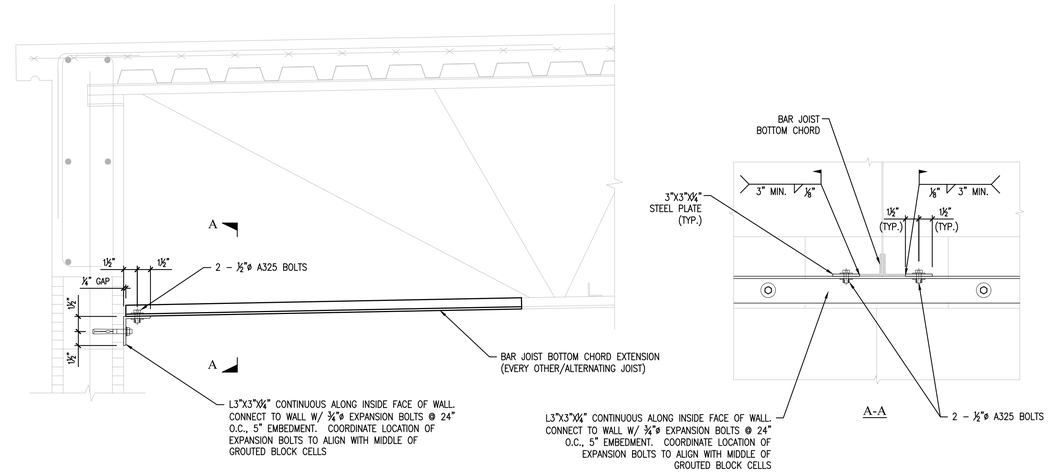

3 / S-6 BAR JOIST BOTTOM CHORD CONNECTION TO MASONRY WALL

SCALE: N.T.S.

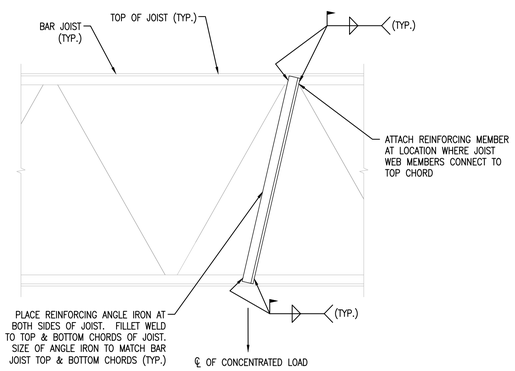

4 / S-6 BAR JOIST REINFORCEMENT FOR SUSPENDED FANS

SCALE: N.T.S.

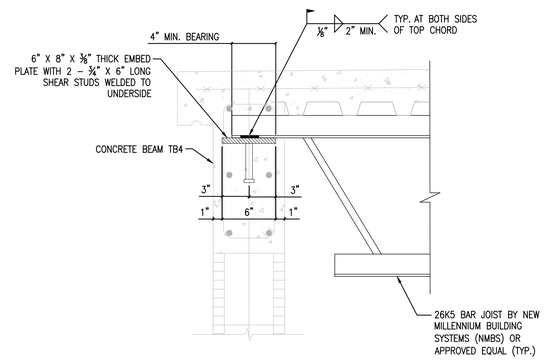

5 / S-6 CONNECTION OF 26K5 BAR JOIST TO CONCRETE TIE BEAM TB4

SCALE: N.T.S.

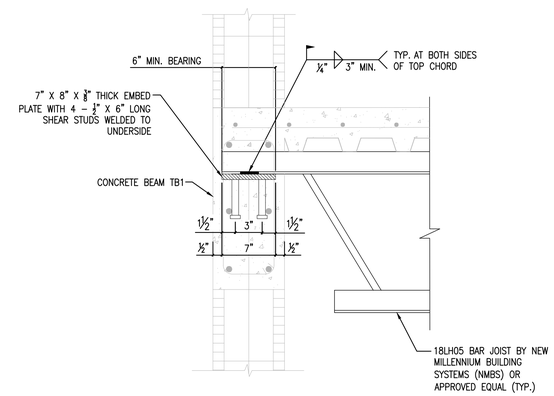

6 / S-6 CONNECTION OF 18LH05 BAR JOIST TO CONCRETE TIE BEAM TB1

SCALE: N.T.S.

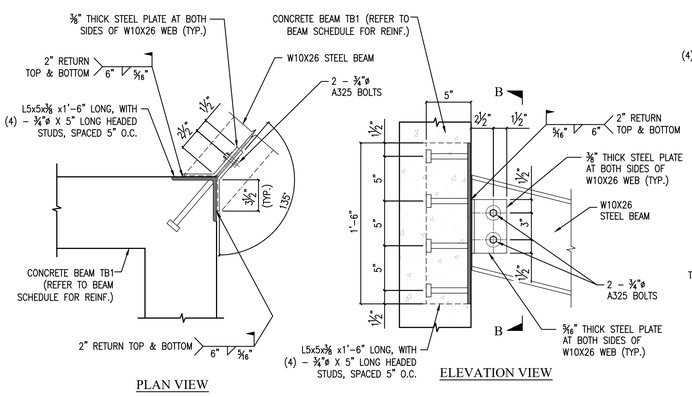

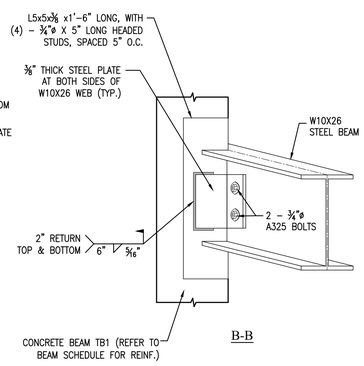

7 / S-6 W10X26 HIP RAFTER UPPER CONNECTION

SCALE: N.T.S.

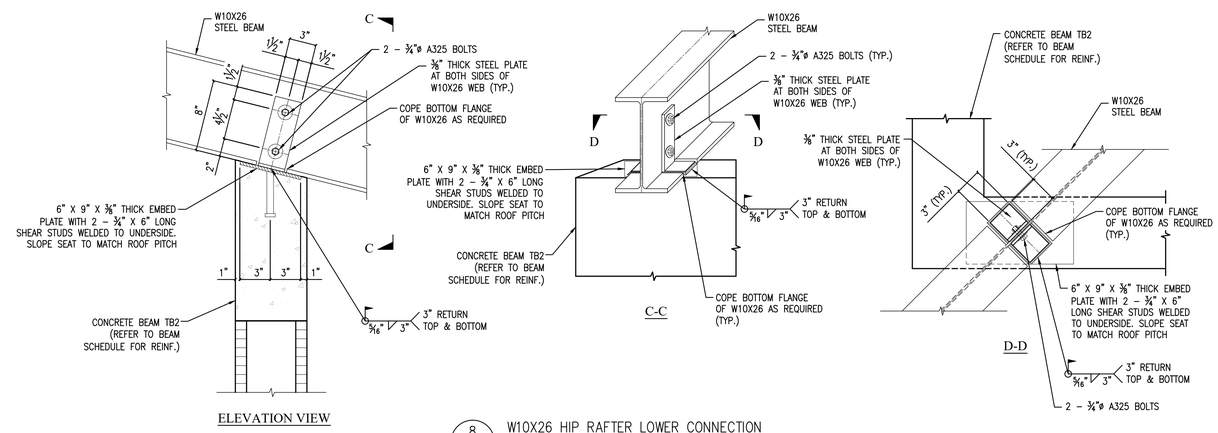

8 / S-6 W10X26 HIP RAFTER LOWER CONNECTION

SCALE: N.T.S.

JDG

BOSCHULTE ARCHITECTURE

BUILDTEC

AGENCY:
VIRGIN ISLANDS
DEPARTMENT OF PUBLIC WORKS
6 Susannaberg
Cruz Bay, VI 00830
phone: (340) 776-6330
website: www.dpw.vi.gov

ARCHITECT:
BOSCHULTE ARCHITECTURE, LLC
PO Box 303100
St. Thomas, VI00803
41-42 Kongens Gade
St. Thomas, VI 00802
phone: (340) 777-7205
e-mail: info@boschulte.com
website: www.boschulte.com

STRUCTURAL ENGINEER:
BUILDTEC, LLC
PO Box 5008
Christiansted, VI 00823
7-1 Bonne Esperance
Christiansted, VI 00820
phone: (340) 513-6918
e-mail: dcartwright@buildtecengi.com

PROFESSIONAL ENGINEER
DAMIAN CARTWRIGHT
28851 - 1B
VIRGIN ISLANDS

STJ MAINTENANCE BUILDING FOR V.I. DEPT. OF PUBLIC WORKS 6 SUSANNABERG CRUZ BAY, VI 00830

PROGRESS SET

No.	Description	Date
1	100% PERMIT SET	07/06/23

REVISIONS

No.	Description	Date

Project number	
Date	12/20/2022
Drawn by	DC
Checked by	DC

STRUCTURAL DETAILS

S006

Scale: AS SHOWN

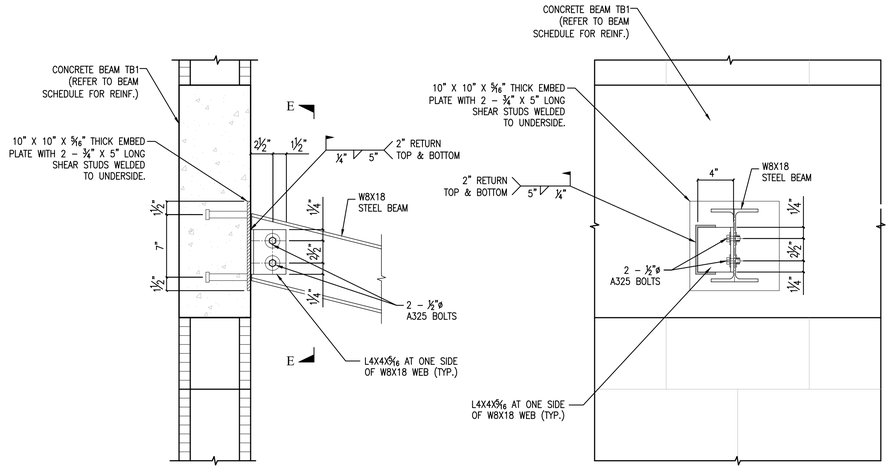

ELEVATION VIEW

E-E

9 / S-7 W8X18 RAFTER UPPER CONNECTION

SCALE: N.T.S.

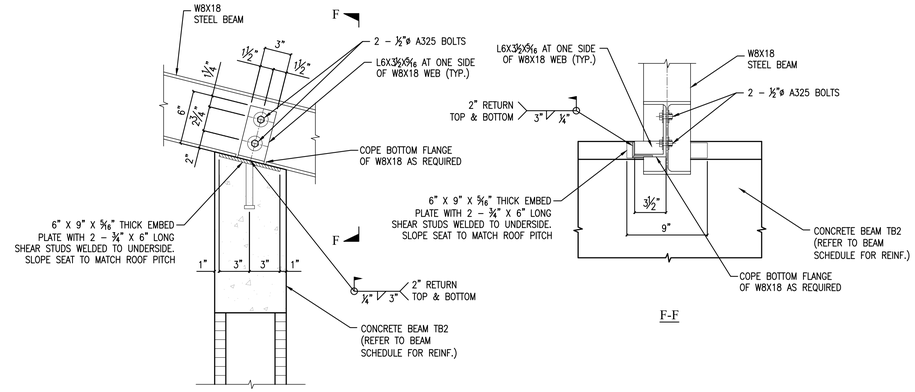

ELEVATION VIEW

F-F

10 / S-7 W8X18 RAFTER LOWER CONNECTION

SCALE: N.T.S.

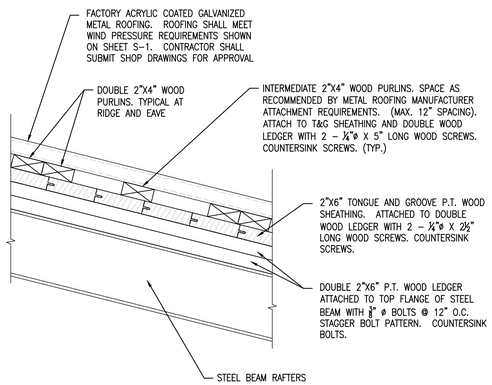

11 / S-7 ROOFING SYSTEM CONNECTION TO STEEL RAFTERS

SCALE: N.T.S.

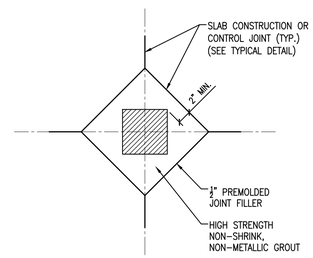

12 / S-7 TYPICAL ISOLATION JOINTS AT COLUMN

SCALE: N.T.S.

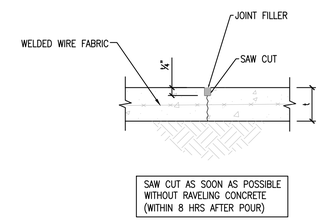

13 / S-7 TYPICAL CONTROL JOINT DETAIL

SCALE: N.T.S.

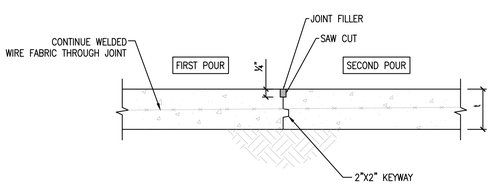

14 / S-7 TYPICAL CONSTRUCTION JOINT

SCALE: N.T.S.

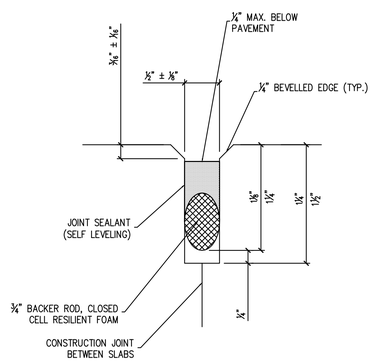

15 / S-7 TYPICAL CONSTRUCTION/CONTROL JOINT SEALANT

SCALE: N.T.S.

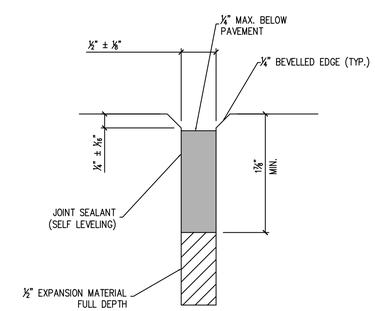

16 / S-7 TYPICAL EXPANSION/ISOLATION JOINT SEALANT

SCALE: N.T.S.

JDG

BOSCHULTE ARCHITECTURE

BUILDTEC

AGENCY:
VIRGIN ISLANDS
DEPARTMENT OF PUBLIC WORKS
6 Susannaberg
Cruz Bay, VI 00830
phone: (340) 776-6346
website: www.dpw.vi.gov

ARCHITECT:
BOSCHULTE ARCHITECTURE, LLC
PO Box 303100
St. Thomas, VI00803
41-42 Kongens Gade
St. Thomas, VI 00802
phone: (340) 776-2205
e-mail: info@boschulte.com
website: www.boschulte.com

STRUCTURAL ENGINEER:
BUILDTEC, LLC
PO Box 3408
Christiansted, VI 00823
7-1 Bonne Esperance
Christiansted, VI 00820
phone: (340)513-9918
e-mail: dcartwright@buildtecengi.com

PROFESSIONAL ENGINEER
DAMIAN CARTWRIGHT
28851-18
VIRGIN ISLANDS

STJ MAINTENANCE BUILDING FOR V.I. DEPT. OF PUBLIC WORKS 6 SUSANNABERG CRUZ BAY, VI 00830

PROGRESS SET

No.	Description	Date
1	100% PERMIT SET	07/06/23

REVISIONS

No.	Description	Date

Project number	
Date	12/20/2022
Drawn by	DC
Checked by	DC

STRUCTURAL DETAILS

S007

Scale: AS SHOWN

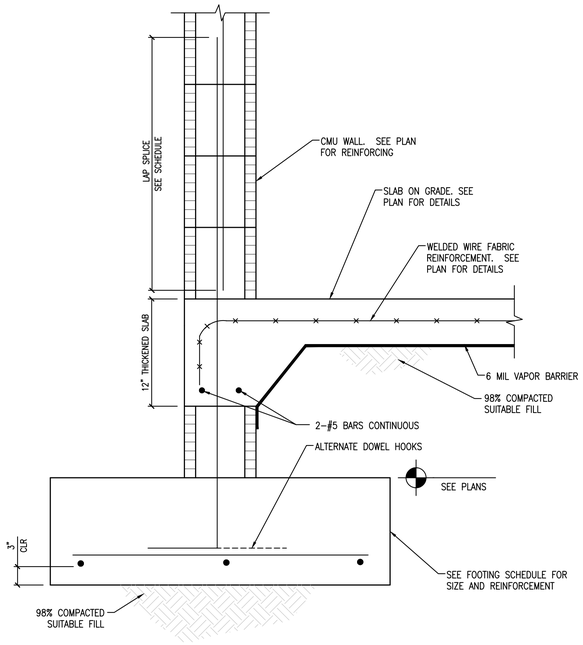

17 / S-8 TYPICAL WALL FOOTING SECTION
SCALE: N.T.S.

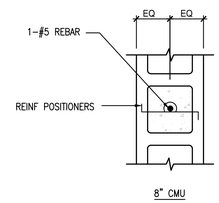

18 / S-8 TYPICAL VERTICAL REINFORCING IN WALL DETAIL
SCALE: N.T.S.

MINIMUM DECK PROPERTIES (VULCRAFT OR APPROVED EQUAL)					
DECK TYPE	DESIGN THICKNESS (in)	Ip (in^4/ft)	Sp (in^3/ft)	In (in^4/ft)	Sn (in^3/ft)
1.5VL20	0.0358	0.186	0.224	0.222	0.231

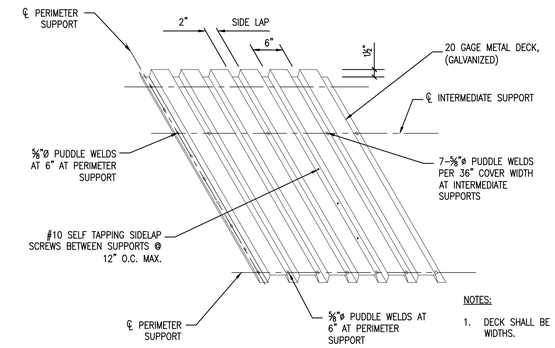

NOTES:

1. DECK SHALL BE FURNISHED IN MODULAR PANEL WIDTHS.
2. INSTALL DECK ENDS OVER SUPPORTS WITH A MINIMUM 1½" BEARING.
3. FASTEN POUR STOPS AND FILLERS TO SUPPORTING STRUCTURE ACCORDING TO MFR'S RECOMMENDATIONS.
4. FASTEN COLUMN CLOSURES, CELL CLOSURES & Z CLOSURES TO DECK TO PROVIDE TIGHT FITTING CLOSURES AT OPEN ENDS OF RIBS AND SIDES OF DECKING. FASTEN CELL CLOSURES AT CHANGE IN DIRECTIONS.
5. GALVANIZING SHALL CONFORM TO ASTM A653, AND STRUCTURAL QUALITY AND FEDERAL SPEC QQ-S-775 TO PROVIDE A MINIMUM COATING PROTECTION OF G90.

19 / S-8 METAL DECK CONNECTION
SCALE: N.T.S.

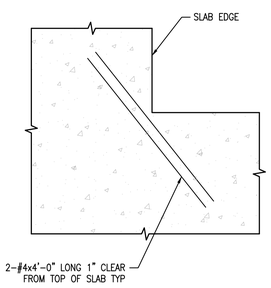

NOTE: DO NOT PLACE RE-ENTRANT BARS AT CONTROL JOINT LOCATIONS.

20 / S-8 EXTRA REINFORCING AT RE-ENTRANT CORNERS OF SLABS ON GRADE
SCALE: N.T.S.

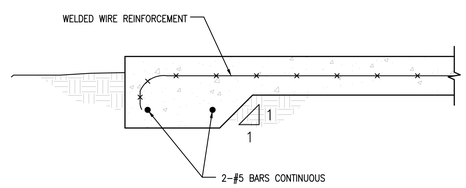

21 / S-8 TYPICAL SECTION THRU THICKENED CONCRETE EDGE (SEE PLANS FOR SIZES & LOCATIONS)
SCALE: N.T.S.

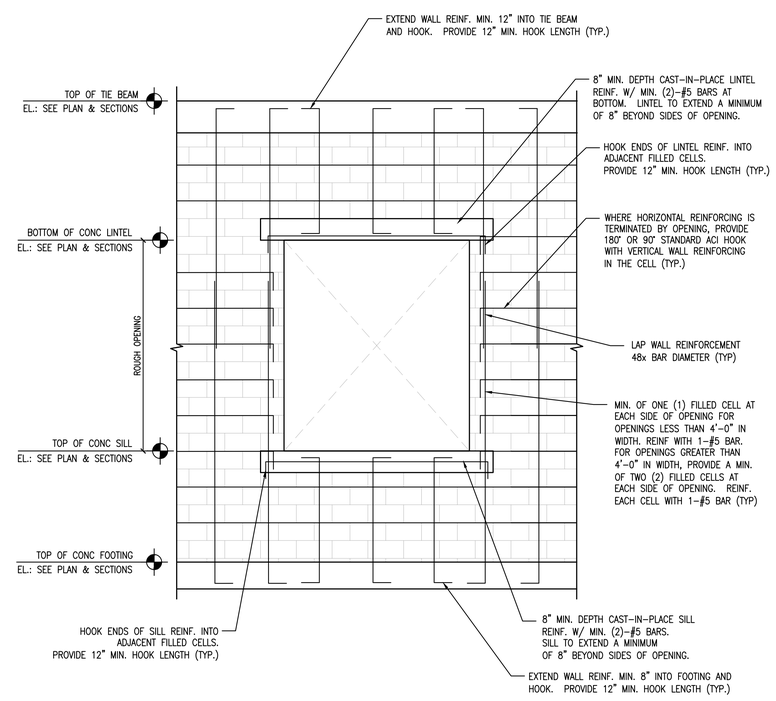

22 / S-8 TYPICAL WALL OPENING REINFORCEMENT
SCALE: N.T.S.

JDG
BOSCHULTE ARCHITECTURE
BUILDTEC

AGENCY:
VIRGIN ISLANDS
DEPARTMENT OF PUBLIC WORKS
6 Susannaberg
Cruz Bay, VI 00830
phone: (340) 776-6346
website: www.dpw.vi.gov

ARCHITECT:
BOSCHULTE ARCHITECTURE, LLC
PO Box 303100
Charlotte Amalie, VI00803
41-42 Kongens Gade
St. Thomas, VI 00802
phone: (340) 776-6205
e-mail: info@boschulte.com
website: www.boschulte.com

STRUCTURAL ENGINEER:
BUILDTEC, LLC
PO Box 4826
Christiansted, VI 00823
7-1 Bonne Esperance
Christiansted, VI 00820
phone: (340)513-6918
e-mail: dcartwright@buildtecengi.com

PROFESSIONAL ENGINEER
DAMIAN CARTWRIGHT
28851-1B
VIRGIN ISLANDS

STJ MAINTENANCE BUILDING FOR V.I. DEPT. OF PUBLIC WORKS 6 SUSANNABERG CRUZ BAY, VI 00830

PROGRESS SET

No.	Description	Date
1	100% PERMIT SET	07/06/23

REVISIONS

No.	Description	Date

Project number	
Date	12/20/2022
Drawn by	DC
Checked by	DC

STRUCTURAL DETAILS

S008

Scale: AS SHOWN

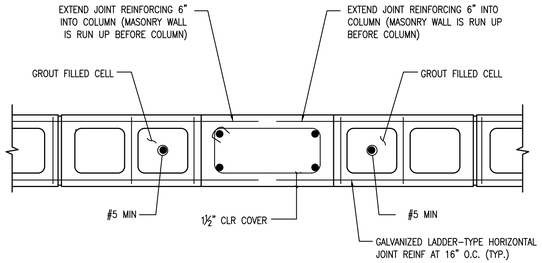

23 / S-9 TIE COLUMN ANCHORAGE DETAIL

SCALE: N.T.S.

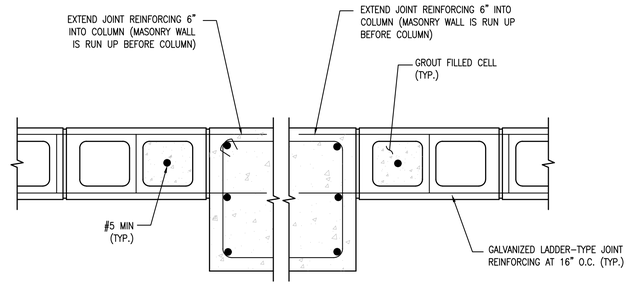

24 / S-9 STRUCTURAL COLUMN ANCHORAGE DETAIL (PREFERRED METHOD)

SCALE: N.T.S.

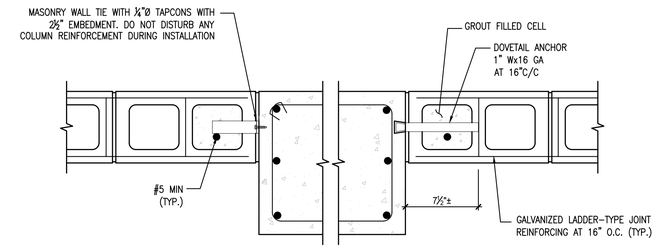

25 / S-9 STRUCTURAL COLUMN ANCHORAGE DETAIL (ALTERNATE METHOD)

SCALE: N.T.S.

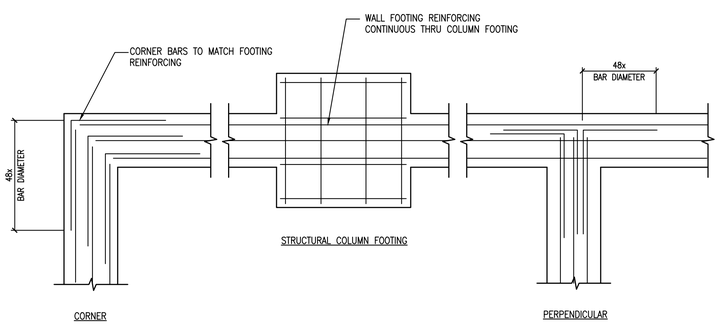

26 / S-9 TYPICAL FOOTING INTERSECTION DETAIL

SCALE: N.T.S.

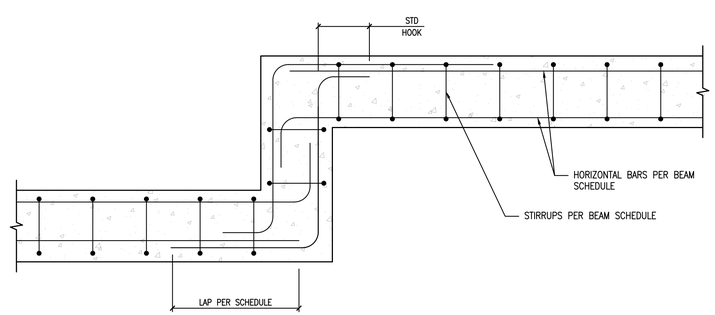

27 / S-9 TYPICAL TIE BEAM REINFORCEMENT DETAIL (PLAN VIEW)

SCALE: N.T.S.

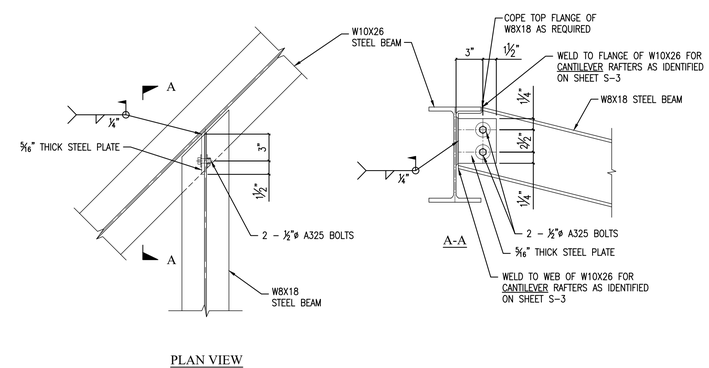

28 / S-9 W8X18 CONNECTION TO W10X26 HIP RAFTER

SCALE: N.T.S.

JDG

BOSCHULTE ARCHITECTURE

BUILDTEC

AGENCY:
VIRGIN ISLANDS
DEPARTMENT OF PUBLIC WORKS
6 Susannaberg
Cruz Bay, VI 00830
phone: (340) 776-6346
website: www.dpw.vi.gov

ARCHITECT:
BOSCHULTE ARCHITECTURE, LLC
PO Box 303100
St. Thomas, VI00803
41-42 Kongens Gade
St. Thomas, VI 00802
phone: (340) 774-2505
e-mail: info@boschulte.com
website: www.boschulte.com

STRUCTURAL ENGINEER:
BUILDTEC, LLC
PO Box 1000
Christiansted, VI 00823
7-1 Bonne Esperance
Christiansted, VI 00820
phone: (340)513-9918
e-mail: dcartwright@buildtecvi.com

PROFESSIONAL ENGINEER
DAMIAN CARTWRIGHT
28851-1B
VIRGIN ISLANDS

STJ MAINTENANCE BUILDING FOR V.I. DEPT. OF PUBLIC WORKS 6 SUSANNABERG CRUZ BAY, VI 00830

PROGRESS SET

No.	Description	Date
1	100% PERMIT SET	07/06/23

REVISIONS

No.	Description	Date

Project number	
Date	12/20/2022
Drawn by	DC
Checked by	DC

STRUCTURAL DETAILS

S009

Scale: AS SHOWN

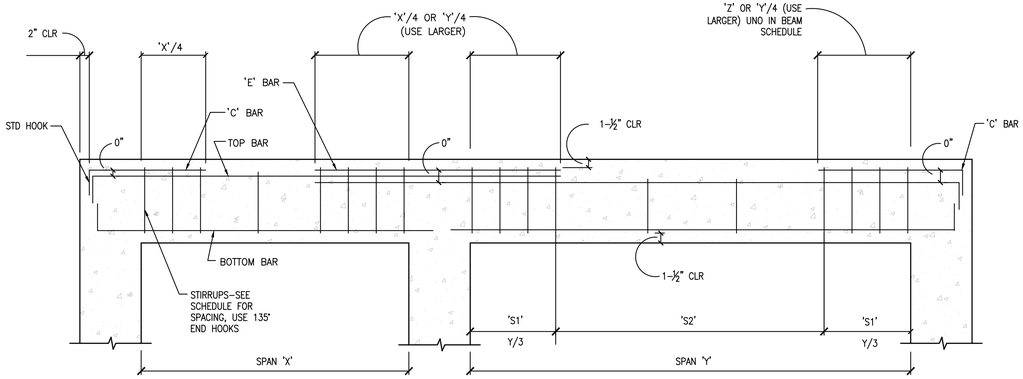

28 / S-10 TYPICAL BENDING DIAGRAM FOR BEAMS & SLABS

SCALE: N.T.S.

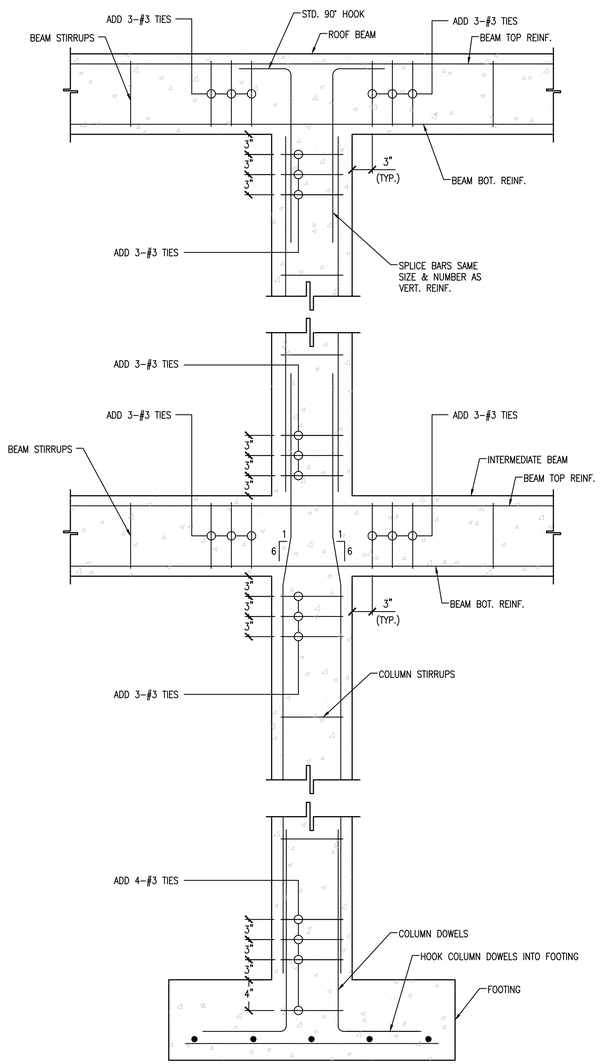

29 / S-10 TYPICAL FOOTING/COLUMN/BEAM INTERFACE

SCALE: N.T.S.

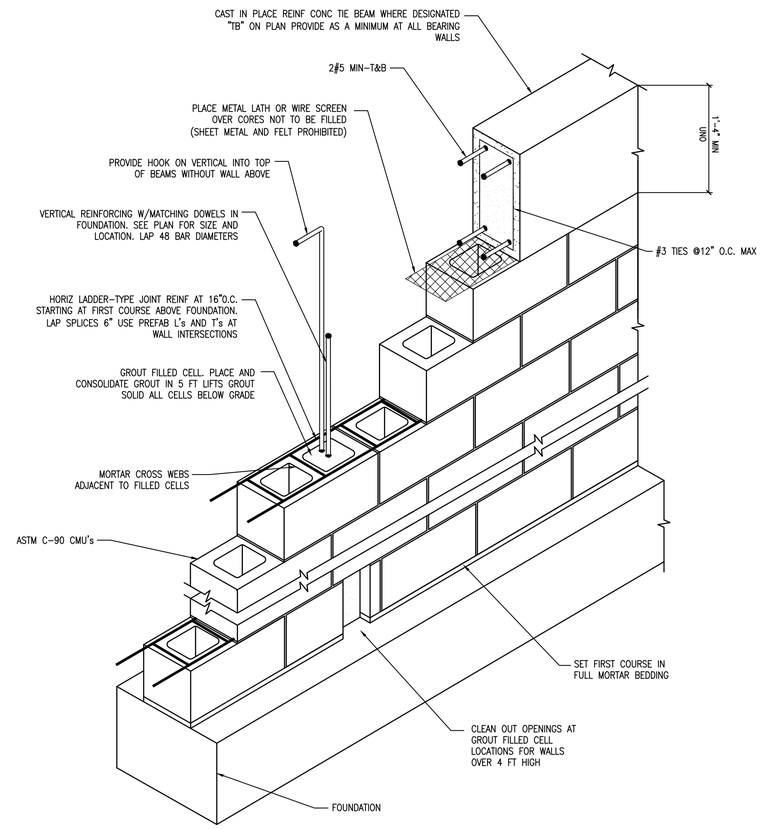

30 / S-10 TYPICAL MASONRY WALL CONSTRUCTION DETAIL FOR RUNNING BOND LAYOUT

SCALE: N.T.S.

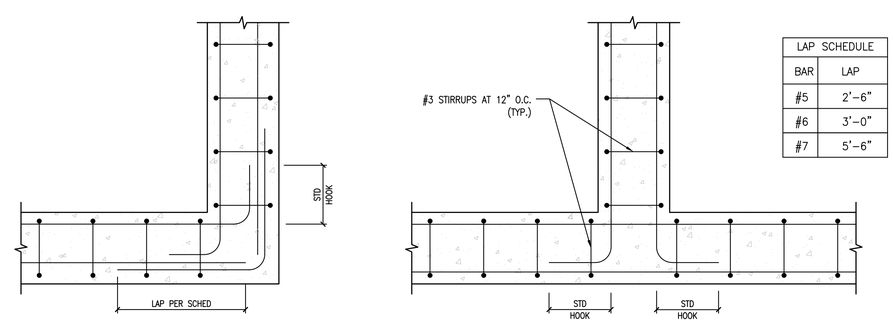

LAP SCHEDULE	
BAR	LAP
#5	2'-6"
#6	3'-0"
#7	5'-6"

31 / S-10 TIE BEAM CORNER DETAILS (PLAN VIEW)

JDG

BOSCHULTE ARCHITECTURE

BUILDTEC

AGENCY:
VIRGIN ISLANDS
DEPARTMENT OF PUBLIC WORKS
6 Susannaberg
Cruz Bay, VI 00830
phone: (340) 776-6346
website: www.dpw.vi.gov

ARCHITECT:
BOSCHULTE ARCHITECTURE, LLC
Bryan Boschulte
PO Box 303100
St. Thomas, VI 00803
41-42 Kongens Gade
St. Thomas, VI 00802
phone: (340) 777-0505
e-mail: info@boschulte.com
website: www.boschulte.com

STRUCTURAL ENGINEER:
BUILDTEC, LLC
Damian Cartwright
Christiansted, VI 00823
7-1 Bonne Esperance
Christiansted, VI 00820
phone: (340)513-9918
e-mail: dcartwright@buildtecengi.com

PROFESSIONAL ENGINEER
DAMIAN CARTWRIGHT
28851-1B
VIRGIN ISLANDS

STJ MAINTENANCE BUILDING FOR V.I. DEPT. OF PUBLIC WORKS 6 SUSANNABERG CRUZ BAY, VI 00830

PROGRESS SET

No.	Description	Date
1	100% PERMIT SET	07/06/23

REVISIONS

No.	Description	Date

Project number	
Date	12/20/2022
Drawn by	DC
Checked by	DC

STRUCTURAL DETAILS

S010

Scale: AS SHOWN

ABBREVIATIONS

A/C	ABOVE CEILING
AD	ACCESS DOOR
ADJ	ADJUSTABLE
AFF	ABOVE FINISHED FLOOR
AUTO	AUTOMATIC
AC	AIR CONDITIONING
AHU	AIR HANDLING UNIT
BAL	BALANCING
BDD	BACKDRAFT DAMPER
B/F	BELOW FLOOR
B/G	BELOW GRADE
B'FLY	BUTTERFLY
BHP	BRAKE HORSEPOWER
BCO	BASE CLEANOUT
CFM	CUBIC FEET PER MINUTE
CBCR	CURVED BLADE CEILING REGISTER
CD	CEILING DIFFUSER
CU	CONDENSING UNIT
CW	COLD WATER (DOMESTIC)
CHWS	CHILLED WATER SUPPLY
CHWR	CHILLED WATER RETURN
CWS	CONDENSER WATER SUPPLY
CWR	CONDENSER WATER RETURN
CON	CONCENTRIC
CO	CLEANOUT
COND	CONDENSATE
db	DRY BULB
DN	DOWN
DR	DRAIN
do	DITTO
dB	DECIBELS
DWG	DRAWING
EA	EACH
EAT	ENTERING AIR TEMPERATURE
ECC	ECCENTRIC
EF	EXHAUST FAN
EOD	EMERGENCY OVERFLOW DRAIN
ER	EXHAUST REGISTER
ESP	EXTERNAL STATIC PRESSURE
EWT	ENTERING WATER TEMPERATURE
EXH	EXHAUST
EFF	EFFICIENCY
F	FAHRENHEIT
FCO	FLOOR CLEANOUT
FCU	FAN COIL UNIT
FSD	FIRE/SMOKE DAMPER
FD	FIRE DAMPER OR FLOOR DRAIN
FL DR	FLOOR DRAIN (only)
FLR	FLOOR
FO	FLAT OVAL
FOB	FLAT ON BOTTOM
FOR	FUEL OIL RETURN
FOS	FUEL OIL SUPPLY
FOT	FLAT ON TOP
FPM	FEET PER MINUTE
FPS	FEET PER SECOND
FT	FEET
G	GATE
GA	GAUGE
GPM	GALLONS PER MINUTE
GL	GLOBE
GCO	GRADE CLEANOUT
HD	HUB DRAIN
HP	HORSEPOWER
HTG	HEATING
HW	HOT WATER (DOMESTIC)
HWR	HOT WATER RETURN
HWRR	HOT WATER REVERSE RETURN
HWS	HOT WATER SUPPLY
Hz	HERTZ
ID	INSIDE DIMENSION
IN	INCHES
KW	KILOWATTS
LAT	LEAVING AIR TEMPERATURE
LB	POUNDS
LG	LINEAR GRILLE
LRG	LINEAR RETURN GRILLE
LWR	LOOP WATER RETURN
LWS	LOOP WATER SUPPLY
MIN	MINIMUM
MAX	MAXIMUM
MD	MANUAL DAMPER
MOD	MOTOR OPERATED DAMPER
MFR	MANUFACTURER
NC	NORMALLY CLOSED
NG	NATURAL GAS
NFWH	NON-FREEZE WALL HYDRANT
NO	NORMALLY OPEN
NOM	NOMINAL
OA	OUTSIDE AIR
OD	OUTSIDE DIMENSION
OBD	OPPOSED BLADE DAMPER
PIU	POWERED INDUCTION UNIT
PSI	POUNDS PER SQUARE INCH
RA	RETURN AIR
RAD	RADIUS
RAG	RETURN AIR GRILLE
RED	REDUCER
RL	REFRIGERANT LIQUID
RS	REFRIGERANT SUCTION
RTU	ROOFTOP UNIT
RAR	RETURN AIR REGISTER
SP	STATIC PRESSURE
SPS	STATIC PRESSURE SENSOR
SA	SUPPLY AIR
SAN	SANITARY
SD	SMOKE DAMPER
SEN	SENSIBLE
SQ	SQUARE
SR	SUPPLY REGISTER
ST	STORM
SS	SPLIT SYSTEM
TEMP	TEMPERATURE
TG	TRANSFER GRILLE
TYP	TYPICAL
UON	UNLESS OTHERWISE NOTED
V	VENT
VA	VALVE
VTR	VENT THRU ROOF
VAV	VARIABLE AIR VOLUME
wb	WET BULB
WC	WATER COLUMN
WHA	WATER HAMMER ARRESTOR
WT	WEIGHT
W	WASTE

SPLIT SYSTEM SCHEDULE

I.D. TAG	MINIMUM TOTAL CAPACITY (BTUH)	MINIMUM SENSIBLE CAPACITY (BTUH)	FAN COIL UNIT DATA: AIRFLOW (CFM)	EXT. S.P. (IN. W.C.) (1)	OUTSIDE AIR (CFM)	MAX H.P.	COIL EAT °F db	COIL EAT °F wb	VOLTS/ PHASE	DRIVE (2)	MAX. FAN RPM	HEATING SECTION TYPE	HEATING SECTION CAPACITY (3)	WEIGHT (LBS)	CONDENSING UNIT DATA: AMBIENT TEMP. (°F)	VOLTS/ PHASE	STAGES	MIN. SEER (4)	WEIGHT (LBS)	BASIS OF DESIGN	REMARKS
FCU-1 / CU-1	14,100	10,200	550	0.5	70	1/2	75.5	65.4	208/1	D	-	-	-	125	95.0	208/1	1	17.0	125	DAIKIN DV24FEC / DX17VSS18	(5)
FCU-2 / CU-2	21,300	15,900	800	0.5	125	1/2	75.7	65.1	208/1	D	-	-	-	125	95.0	208/1	1	17.0	125	DAIKIN DV24FEC / DX17VSS24	(5)

(1) THIS IS THE S.P. EXTERNAL TO THE ENTIRE FAN COIL UNIT ASSEMBLY (WET COIL, CASING, CLEAN FILTERS, AND FURNACE LOSSES ARE NOT INCLUDED IN THIS EXT. S.P.).
(2) B = BELT DRIVE, D = DIRECT DRIVE.
(3) THIS IS THE MINIMUM OUTPUT CAPACITY (KW FOR ELEC, BTU/H FOR GAS OR HEAT PUMP).
(4) RATINGS BASED ON AHRI STANDARDS 210 / 240.
(5) PROVIDE THE FOLLOWING ACCESSORIES FOR THE FAN COIL UNIT: VIBRATION ISOLATORS, CONDENSATE PUMP (LITTLE GIANT MODEL VCMA-15ULT OR APPROVED EQUAL), AND PROGRAMMABLE ELECTRONIC THERMOSTAT.

GENERAL SPLIT SYSTEM NOTES:
1. CONTRACTOR SHALL COORDINATE THE REQUIRED SIZING OF ALL REFRIGERANT LINE SETS WITH THE HVAC UNIT MFG.
2. HVAC UNIT MFG. SHALL BE RESPONSIBLE FOR PROVIDING ALL REQUIRED CU AND FCU ACCESSORIES TO PROVIDE A COMPLETE AND OPERATIONAL SYSTEM.
3. HVAC UNIT MFG. SHALL BE RESPONSIBLE FOR REFRIGERANT LINE SIZING INCLUDING ANY REFRIGERANT LINE REQUIREMENTS FOR SLOPING OR TRAPPING TO ENSURE PROPER OIL RETURN AND SYSTEM OPERATION.
4. CONTRACTOR SHALL INSTALL LIQUID LINE FILTER DRIERS IN ALL LINE SETS.
5. CONTRACTOR SHALL ARRANGE UNIT LAYOUT TO ENSURE SERVICEABILITY OF COMPRESSOR AND CONDENSER FAN.

FAN SCHEDULE

I.D. TAG	CAPACITY (CFM)	S.P. (IN. W.G.)	MOTOR H.P.	DRIVE	MAX. FAN RPM	MAX. NOISE	VOLTS/ PHASE	TYPE OF FAN	WEIGHT (LBS).	BASIS OF DESIGN	REMARKS
TEF-1	180	0.5	56 W	D	987	3.0 SONES	120/1	INLINE CABINET	30	GREENHECK CSP-A250	(1) (2)
EF-1	250	0.375	91 W	D	1,048	2.0 SONES	120/1	INLINE CABINET	30	GREENHECK CSP-A390	(1) (3)
EF-2	300	0.375	94 W	D	1,192	2.5 SONES	120/1	INLINE CABINET	30	GREENHECK CSP-A390	(1) (3)
EF-3	3,300	0.5	3/4	B	982	60 dBA	120/1	INLINE CENTRIFUGAL	175	GREENHECK BSQ-180	(1) (4)
EF-4	800	0.375	467 W	D	940	1.5 SONES	120/1	INLINE CABINET	70	GREENHECK CSP-A1050	(1) (4)
EF-5	500	0.375	237 W	D	1,026	1.4 SONES	120/1	INLINE CABINET	40	GREENHECK CSP-A710	(1) (3)

(1) FAN SHALL BE SUSPENDED FROM STRUCTURE. INCLUDE GRAVITY BACKDRAFT DAMPER AND SPRING TYPE VIBRATION ISOLATORS.
(2) FAN SHALL RUN CONTINUOUSLY DURING OCCUPIED HOURS. INTERLOCK TO TIMER AS NEEDED.
(3) FAN SHALL BE CONTROLLED BY A LINE VOLTAGE THERMOSTAT MOUNTED NEXT TO LIGHT SWITCH NEAR DOOR.
(4) FAN SHALL BE CONTROLLED BY A WALL SWITCH.

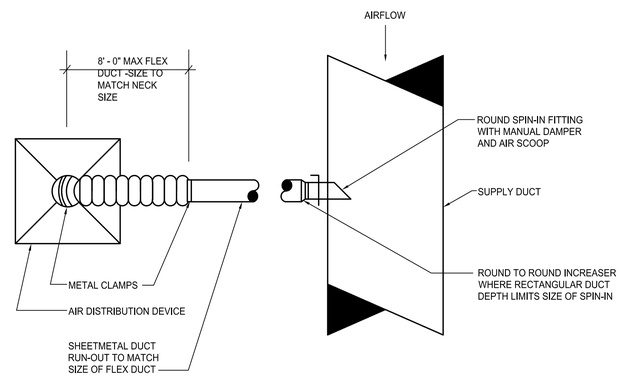

1 M001 DIFFUSER CONNECTION DETAIL
NOT TO SCALE
©BWA 2020

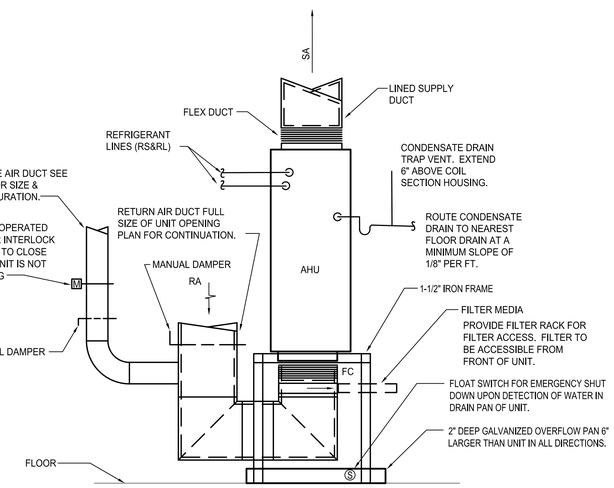

2 M001 INDOOR UNIT DETAIL
NO SCALE
©BWA 2020

HVAC LEGEND

	CEILING DIFFUSER
	CEILING RETURN AIR GRILLE or EXHAUST GRILLE
	SIDE-WALL or DUCT MOUNTED REGISTER
	SLOT DIFFUSER
	MANUAL VOLUME DAMPER
	FIRE DAMPER, FIRE SMOKE DAMPER
T	THERMOSTAT
H	HUMIDISTAT
CO	CO2 MONITOR
M	MOTOR OPERATED DAMPER
	EXISTING WORK
	NEW WORK
	WORK TO BE REMOVED
SD	SMOKE DETECTOR
R	PRESSURE REGULATOR VALVE 5 PSI TO 7" WATER GAUGE

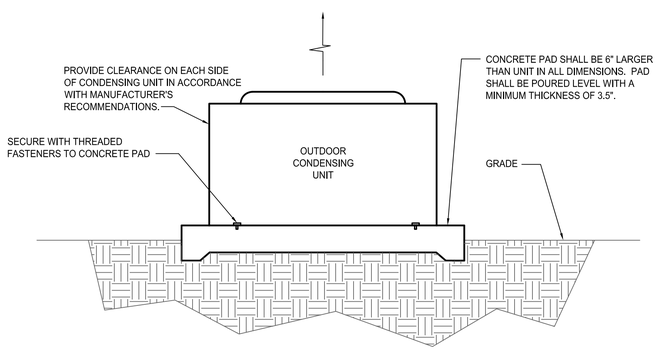

3 M001 CONDENSING UNIT DETAIL
NO SCALE

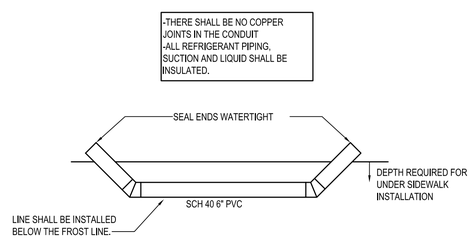

4 M001 UNDERGROUND REFRIGERANT PIPING
NOT TO SCALE

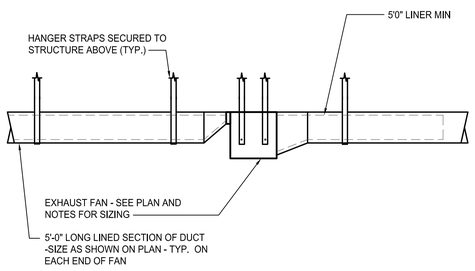

5 M001 INLINE FAN DETAIL
NOT TO SCALE

BW&A
Barrett, Woodyard & Associates, Inc.

3495 Holcomb Bridge Road
Norcross, GA 30092
Phone (770) 810-8800
Fax (770) 810-8808

PROFESSIONAL ENGINEER CHARLES E. STYLES 1784-E U.S. VIRGIN ISLANDS

No.	Drawing Issue Description	Date
1	Issued for Permit	06/30/23

DPW MAINTENANCE BUILDING

PARCEL NO. 6A
ESTATE SUSANNABERG
ST. JOHN, U.S VIRGIN ISLANDS

MECHANICAL LEGEND, ABBREVIATIONS, SCHEDULES AND DETAILS

S. BREWER	2022-1512
PROJECT MANAGER	PROJECT NO.
E. CURTIS	AS NOTED
PROJECT ENGINEER	SCALE
E. CURTIS	06/30/23
DRAWN BY	DATE
FILE PLOT DATE	DRAWING NO.

M001

ISSUED FOR CONSTRUCTION

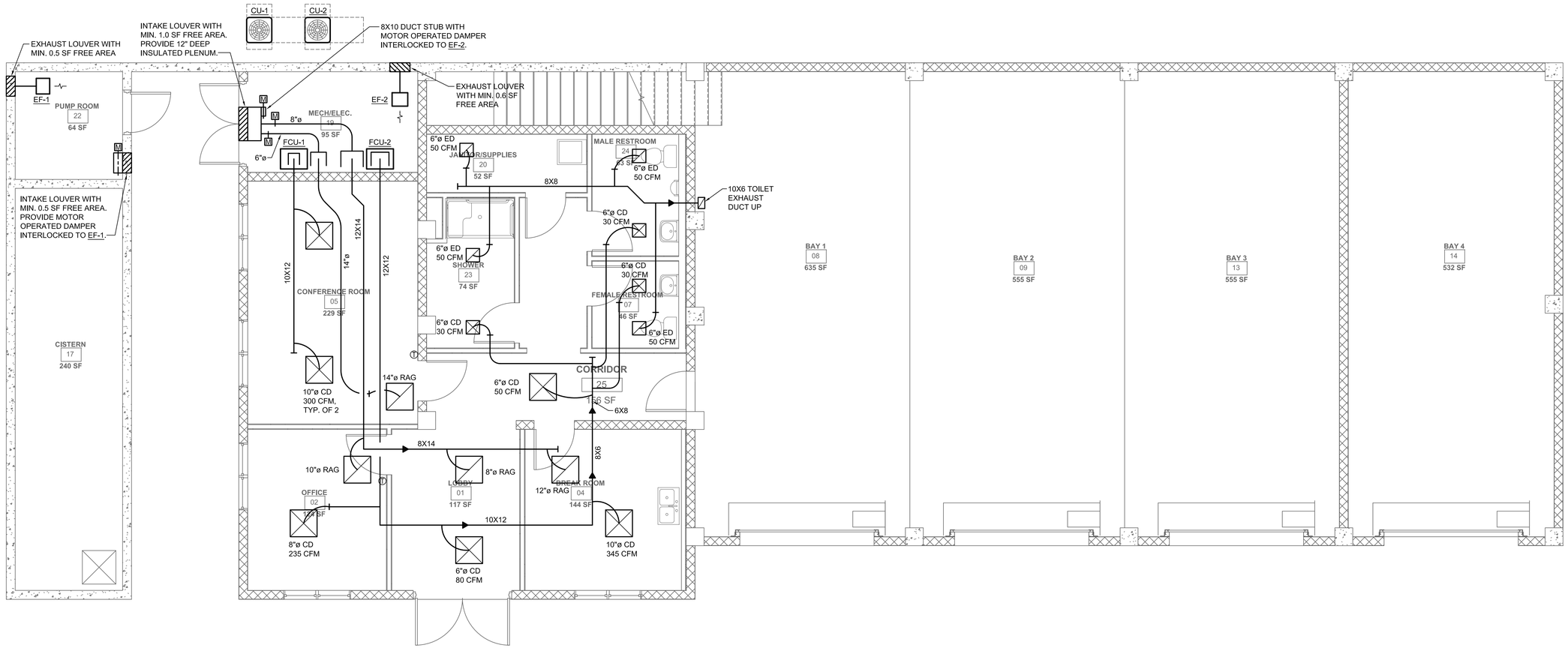

1 M101 LEVEL ONE FLOOR PLAN – MECHANICAL
1/4"=1'-0"

KEY NOTES:

1. LINEAR RETURN SLOT MOUNTED IN SIDEWALL, APPROXIMATELY 11'-0" AFF; TITUS MODEL MLR-39 WITH TWO (2) 1" WIDE SLOTS OR APPROVED EQUAL WITH LENGTH AS INDICATED.
2. PROVIDE LINED RETURN AIR BOOT ABOVE CEILING WITH 1.0 SF FREE AREA, UNLESS OTHERWISE NOTED. IF NECESSARY BECAUSE OF SPACE CONSTRAINTS MULTIPLE RETURN AIR BOOTS MAY BE USED FOR AN EQUAL TOTAL FREE AREA. REFER TO DETAIL 3/M-0.2.
3. PROVIDE TRANSFER GRILLE WITH LINED RETURN AIR BOOT ABOVE CEILING WITH DUCT MATCHING GRILLE SIZE. GRILLE SHALL BE 12X6 RAR, UNLESS OTHERWISE NOTED. REFER TO DETAIL 4/M-0.2.
4. PROVIDE 12X12 LOUVER IN DOOR FOR TRANSFER AIR; TITUS CT-700 OR APPROVED EQUAL.
5. INTAKE LOUVER WITH MINIMUM 12.0 SF FREE AREA. PROVIDE FULL SIZE MOTOR OPERATED DAMPER.
6. EXHAUST LOUVER WITH MINIMUM 10.0 SF FREE AREA. PROVIDE FULL SIZE MOTOR OPERATED DAMPER. CONNECT GENERATOR RADIATOR EXHAUST DUCTWORK TO MOTOR OPERATED DAMPER, FULL SIZE OF RADIATOR AND DAMPER CONNECTIONS.
7. GENERATOR INTAKE & EXHAUST MOTOR OPERATED DAMPERS SHALL BE INTERLOCKED TO OPEN WITH GENERATOR OPERATION AND SHALL FAIL OPEN.
8. INTAKE LOUVER WITH MINIMUM 1.0 SF FREE AREA. INSTALL AS HIGH AS POSSIBLE. PROVIDE FULL SIZE MOTOR OPERATED DAMPER INTERLOCKED TO EF-5 OPERATION.
9. EXHAUST LOUVER WITH MINIMUM 1.0 SF FREE AREA. INSTALL AS HIGH AS POSSIBLE. PROVIDE 12" DEEP PLENUM.
10. PROVIDE GENERATOR ENGINE EXHAUST, SIZED PER GENERATOR MANUFACTURER, ROUTED FROM MUFFLER CONNECTION UP THROUGH ROOF. PROVIDE WEATHER CAP AND CALCIUM SILICATE INSULATION.

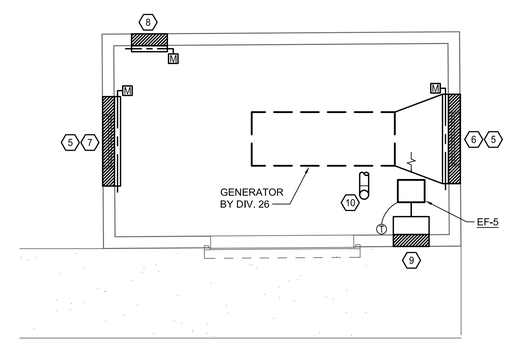

2 M101 GENERATOR ENCLOSURE PARTIAL PLAN
1/4"=1'-0"

BW&A
Barrett, Woodyard & Associates, Inc.

3495 Holcomb Bridge Road
Norcross, GA 30092
Phone (770) 810-8800
Fax (770) 810-8808

PROFESSIONAL ENGINEER
CHRISTOPHER LYLES
1751-E
U.S. VIRGIN ISLANDS

No.	Drawing Issue Description	Date
1	Issued for Permit	06/30/23

DPW MAINTENANCE BUILDING

PARCEL NO. 6A
ESTATE SUSANNABERG
ST. JOHN, U.S VIRGIN ISLANDS

LEVEL ONE FLOOR PLAN - MECHANICAL

S. BREWER	2022-1512
PROJECT MANAGER	PROJECT NO.
E. CURTIS	AS NOTED
PROJECT ENGINEER	SCALE
E. CURTIS	06/30/23
DRAWN BY	DATE
	M101
FILE PLOT DATE	DRAWING NO.

ISSUED FOR CONSTRUCTION

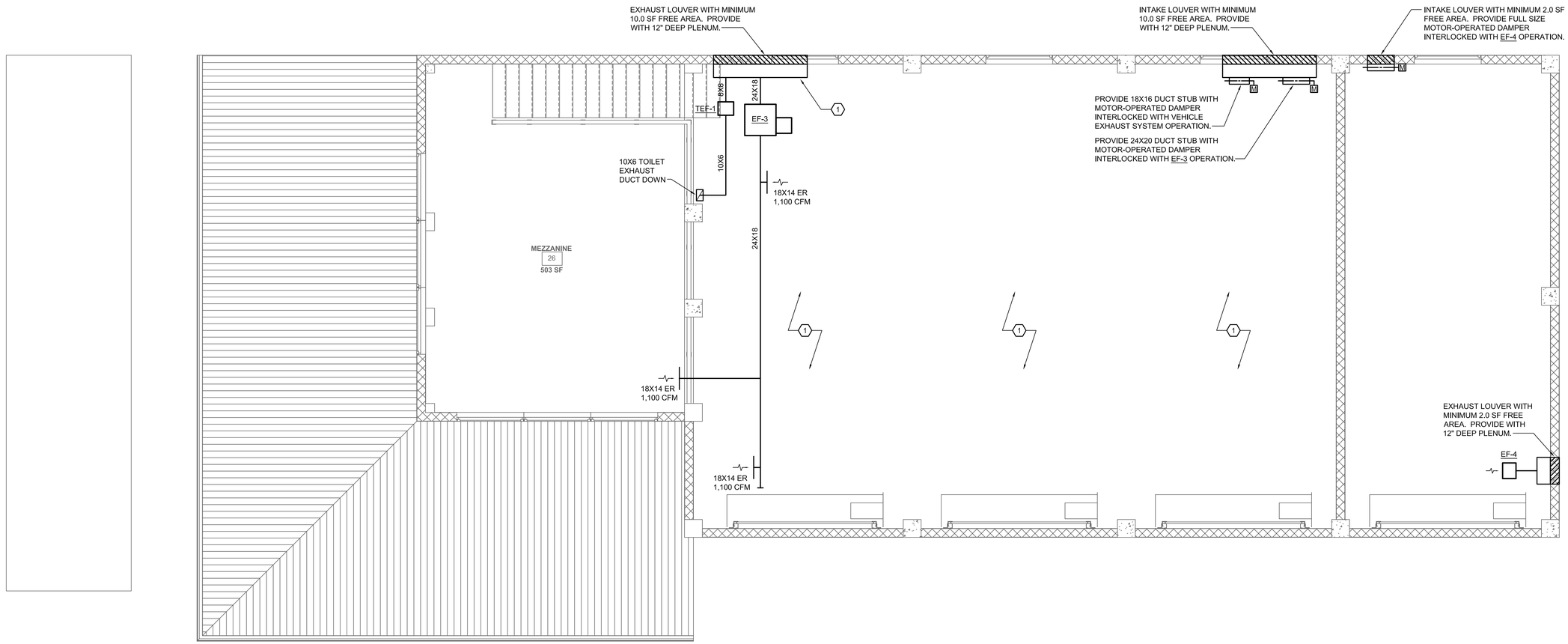

1 / M102 MEZZANINE FLOOR PLAN – MECHANICAL

1/4"=1'-0"

KEY NOTES:

1. PROVIDE VEHICLE EXHAUST EXTRACTION SYSTEM FOR THREE (3) VEHICLE BAYS. SYSTEM SHALL BE COMPLETE WITH HOSE REELS, RAILS, HOSES, NOZZLES, EXTRACTOR FANS, DUCTWORK, CONTROLS, ETC.; PLYMOVENT OR EQUAL. SYSTEM LAYOUT SHALL BE AS RECOMMENDED BY MANUFACTURER FOR MECHANICAL BAY LAYOUT AND LIFT LOCATIONS. EXHAUST FANS SHALL BE DUCTED TO THE EXHAUST LOUVER PLENUM.

BW&A

Barrett, Woodyard & Associates, Inc.

3495 Holcomb Bridge Road
Norcross, GA 30092
Phone (770) 810-8800
Fax (770) 810-8808

PROFESSIONAL ENGINEER
CHRISTOPHER LYLES
1784-E
U.S. VIRGIN ISLANDS

No.	Drawing Issue Description	Date
1	Issued for Permit	06/30/23

DPW MAINTENANCE BUILDING

PARCEL NO. 6A
ESTATE SUSANNABERG
ST. JOHN, U.S VIRGIN ISLANDS

MEZZANINE FLOOR PLAN - MECHANICAL

S. BREWER	2022-1512
PROJECT MANAGER	PROJECT NO.
E. CURTIS	AS NOTED
PROJECT ENGINEER	SCALE
E. CURTIS	06/30/23
DRAWN BY	DATE
	M102
FILE PLOT DATE	DRAWING NO.

ISSUED FOR CONSTRUCTION

ELECTRICAL GENERAL NOTES

1. ALL WORK IN THIS DIVISION SHALL COMPLY WITH ALL LOCAL BUILDING CODES, LAWS, REGULATIONS, ORDINANCES, AND THE REQUIREMENTS OF THE 2020 NATIONAL ELECTRICAL CODE. ALL WORK SHALL COMPLY WITH BASE BUILDING SPECIFICATIONS. OBTAIN A COPY OF SPECIFICATIONS FROM BUILDING LANDLORD IF NECESSARY.
2. THE CONTRACTOR SHALL KEEP A RECORD OF THE CHANGES WHICH ARE IN CONFLICT WITH THESE DRAWINGS AND SPECIFICATIONS. AT THE COMPLETION OF HIS WORK HE SHALL SUBMIT "AS BUILT" PRINTS TO THE OWNER.
3. DRAWINGS ARE GENERALLY DIAGRAMMATIC AND DO NOT NECESSARILY SHOW EVERY FITTING AND DETAIL. ALL WORK SHALL BE INSTALLED SO THAT JUNCTION BOXES AND COMPONENTS WILL BE ACCESSIBLE FOR SERVICE.
4. ALL SYSTEMS, EQUIPMENT, COMPONENTS, WORK, ETC. PROVIDED UNDER THIS DIVISION SHALL BE COVERED BY A ONE YEAR GUARANTEE STARTING AT THE TIME OF FINAL ACCEPTANCE OF THE WORK BY THE OWNER. ANY DEFECTS IN THE WORK, SYSTEMS, EQUIPMENT, OR COMPONENTS FOUND DURING THIS YEAR SHALL BE CORRECTED AT NO CHARGE. THE GUARANTEE SHALL INCLUDE PROVIDING ALL NECESSARY CUTTING, PATCHWORK, REPAINTING, ETC. TO MAKE THE WORK COMPLETE AND NEW.
5. ALL WORK MUST BE PERFORMED IN A NEAT AND WORKMANLIKE MANNER ACCORDING TO GENERALLY ACCEPTED PRINCIPALS OF FIRST CLASS WORKMANSHIP.
6. ALL ROOF PENETRATIONS SHALL BE AS AUTHORIZED BY ARCHITECT AND OWNER. MAINTAIN ROOF WATERTIGHT INTEGRITY.
7. ALL PENETRATIONS THRU RATED WALLS, FLOORS AND CEILINGS SHALL BE FIRE STOPPED PER NEC.
9. DEVICE BOXES IN RATED WALLS SHALL MEET INTERNATIONAL BUILDING CODE SECTION 706.4.
10. COORDINATE ALL FLOOR CORES AND FLOOR BOXES WITH ARCHITECT AND OWNER.
11. ARC-FLASH HAZARD WARNING SHALL BE PROVIDED ON ALL EQUIPMENT IN AFFECTED ELECTRICAL ROOMS PER NEC 110.16.
12. ALL CONDUCTORS SHALL BE COPPER WITH TYPE "THW" OR "THHN" INSULATION AND THE MINIMUM WIRE SIZE SHALL BE #12 AWG WITH A 167 DEGREE TEMPERATURE RATING.
13. MULTI-WIRE BRANCH CIRCUITS SHALL BE PROVIDED WITH A MEANS THAT WILL SIMULTANEOUSLY DISCONNECT ALL UNGROUNDED CONDUCTORS PER N.E.C. 210.4(B).
14. NEUTRAL CONDUCTORS FOR CONNECTION TO ALL FURNITURE SYSTEMS TO BE #10AWG.
15. PROVIDE ALL GROUNDING AS REQUIRED BY N.E.C.
16. PROVIDE A SEPARATE GREEN, INSULATED, #12 AWG EQUIPMENT GROUNDING CONDUCTOR ROUTED WITH THE BRANCH CIRCUIT HOMERUN CONDUCTORS.
17. PROVIDE #12 AWG GND FOR ALL MECHANICAL EQUIPMENT UNLESS SHOWN OTHERWISE. ALL EQUIPMENT SHALL BE GROUNDED AT THE PANEL WHICH FEEDS THE EQUIPMENT.
18. ALL CONDUIT MUST BE CONCEALED IN THE WALLS OR ABOVE THE CEILING UNLESS OTHERWISE NOTED. MINIMUM CONDUIT SIZE IS 3/4".
19. ALL CABLE USED IN PLENUM SHALL BE PLENUM-RATED.
20. ARMORED CABLE MAY BE USED IN WALLS AND MILLWORK ONLY AND MUST BE MC TYPE (WITH GROUND). ALL CONDUIT TO AND ABOVE THE CEILING SHALL BE EMT.
21. ARMORED CABLE MAY BE USED FOR LIGHTING CIRCUITING ABOVE CEILINGS AND MUST BE MC TYPE (WITH GROUND). PROVIDE EMT FOR CIRCUIT HOMERUNS.
22. PROVIDE A JUNCTION BOX WITH A 1" CONDUIT STUBBED UP 6" ABOVE ACCESSIBLE CEILING OR TO TELEPHONE BACKBOARD FOR ALL NEW DATA AND TELEPHONE OUTLETS. PROVIDE PULL STRING AND BUSHING AT THE TERMINATION ABOVE ACCESSIBLE CEILING. EXISTING DATA CABLES ARE TO BE REMOVED WHERE NOT BEING UTILIZED. COORDINATE WITH THE TENANT.
23. DUPLEX RECEPTACLES SHALL BE PLASTIC, TWO-POLE, THREE WIRE, SELF-GROUNDING, SIDE-WIRED, 125 VOLTS AND 20A RATED, AND MATCH EXISTING IF POSSIBLE.
24. DEDICATED RECEPTACLES TO RECEIVE VISUAL DESIGNATION.
25. COORDINATE RECEPTACLE NEMA TYPE AND VOLTAGE WITH COPIERS AND EQUIPMENT PRIOR TO INSTALLATION.
26. DEVICE MOUNTING HEIGHTS ARE TO BE MEASURED TO THE DEVICE CENTERLINE UNLESS NOTED OTHERWISE.
27. PROVIDE A LAMINATED LABEL ON COVERPLATE FOR ALL OUTLETS IDENTIFYING PANEL AND BREAKER NUMBER FROM WHICH IT IS FED.
28. BLANK FACEPLATES ARE NOT ALLOWED, U.N.O. ANY EXISTING OUTLET OR TELE/DATA LOCATION NOT USED OR SHOWN WITHIN THE SCOPE OF WORK IN THESE PLANS SHOULD BE REMOVED, PATCHED, AND REPAIRED.
29. ALL SWITCHES FOR FANS, LIGHTS, ETC. WHICH ARE SHOWN TO BE MOUNTED IN THE SAME GENERAL AREA SHALL SHARE A MULTI-GANG COVER PLATE AS REQUIRED.
30. ALL DIMMERS SHALL BE LUTRON NOVA T-STAR SERIES UNLESS NOTED OTHERWISE. DIMMER SWITCH SHALL BE FULLy COMPATIBLE WITH THE LIGHT FIXTURES IT CONTROLS. COORDINATE DIMMING PROTOCOL (0-10V, ELV, ETC.) WITH LIGHT FIXTURE MANUFACTURER. COORDINATE FINISH WITH ARCHITECT.
31. FASTEN ALL RECESSED LIGHTING FIXTURES TO STRUCTURE OR GRID PER NEC.
32. PROVIDE A NEUTRAL CONDUCTOR FOR SWITCHES CONTROLLING LIGHTING LOADS PER NEC 404.2(C). CAP NEUTRAL CONDUCTOR WHERE NOT REQUIRED BY MANUFACTURER.
33. LIGHTING CONTROL SYSTEMS SHALL MEET 2009 IECC.
34. WHERE WORK BY THE GENERAL CONTRACTOR (WALL REMOVAL, NEW OR RELOCATED WALL OPENING, ETC.) RESULTS IN THE REMOVAL, RELOCATION OR REFEEDING OF EXISTING TO REMAIN ELECTRICAL DEVICES OR LIGHTING FIXTURES, THE ELECTRICAL CONTRACTOR SHALL DISCONNECT OR RECONNECT AS REQUIRED ALL ACTIVE DEVICES REMAINING ON THAT CIRCUIT SYSTEM.
35. WHERE DEMOLITION DISRUPTS ELECTRICAL CONTINUITY OF EXISTING TO REMAIN RECEPTACLES/LIGHTS, AND NO RECONNECTION IS SHOWN, RECONNECT TO ITS EXISTING CIRCUIT.
36. WHERE RECEPTACLES ARE REMOVED OR MOVED, REUSE EXISTING CIRCUITRY IF POSSIBLE.
37. ALL EXISTING POWER DISTRIBUTION, FIRE ALARM, ETC. JUNCTION BOXES SHALL BE RELOCATED IF LOCATED OVER A CEILING SCHEDULED TO BE GYPSUM BOARD. ALL EXISTING JUNCTION BOXES SHALL BE RELOCATED IF NECESSARY TO AN ACCESSIBLE LOCATION.
39. RING OUT ALL CIRCUITS IN EXISTING PANEL(S) (IF APPLICABLE) AFFECTED BY THIS ALTERATION. WHERE ADDITIONAL CIRCUITS ARE NEEDED, REUSE CIRCUITS AVAILABLE FOR REUSE, OR PROVIDE NEW BREAKERS, TAG ALL UNUSED CIRCUITS AS SPARE, REPLACE ALL INOPERATIVE OR DEFECTIVE CIRCUIT BREAKERS. TIGHTEN ALL CONNECTIONS.
40. REUSE EXISTING HOMERUNS WHERE APPLICABLE WITHIN THE DESIGN CRITERIA OF THESE DRAWINGS. ALL HOMERUNS ARE TO BE PROTECTED BY 20A/1P BREAKERS UNLESS OTHERWISE NOTED.
41. REMOVE ALL ABANDONED CIRCUITING, WIRING, CABLING, AND CONDUIT SYSTEMS FOR POWER, LOW VOLTAGE CONTROLS AND COMMUNICATIONS BACK TO SOURCE.
42. PROVIDE ENGRAVED NAMEPLATE ON ALL NEW PANELS INDICATING PANEL NAME AND SOURCE PER NEC 408.4(B).
43. PROVIDE A UPDATED, PRINTED PANEL SCHEDULE FOR ALL PANELS MODIFIED WITHIN SCOPE OF WORK. CORRECTLY LABEL ALL EXISTING CIRCUITS, NEW CIRCUIT, SPARES AND SPACES IN ACCORDANCE WITH NEC 408.4.
44. CONTRACTOR SHALL CLEAN SITE AT END OF PROJECT. ALL DUST, DEBRIS, OILS, SPRAYS, FINGERPRINTS, AND LABELS SHALL BE REMOVED FROM ALL EXPOSED FINISHED SURFACES. ELECTRICAL AND TELEPHONE ROOMS SHALL BE PUT BACK AS FOUND; FLOORS ARE TO BE SWEPT, MOPPED, AND REPAINTED.

LIGHTING FIXTURE SCHEDULE
(SPECIFIED BY ENGINEER)

TYPE	DESCRIPTION
A	2'X2' LED SPECIFICATION GRADE TROFFER. PROVIDE WITH UNIVERSAL VOLTAGE DRIVER. PROVIDE WITH 0-10V DIMMING DRIVER. 4000K COLOR TEMPERATURE. 2000 LUMENS. 80 CRI. LAMPS: 16.2W LED MANUF: COOPER CRUZE ST 22CZ2 SERIES
AE	SAME AS 'A' BUT WITH 90-MIN BATTERY BACKUP.
B	6" RECESSED LED DOWNLIGHT. PROVIDE WITH UNIVERSAL VOLTAGE DRIVER. PROVIDE WITH 0-10V DIMMING DRIVER. 4000K COLOR TEMPERATURE. 1000 LUMENS. 80 CRI. LAMPS: 9.9W LED MANUF: COOPER LD6B10-M SERIES
C	LOW BAY LINEAR FIXTURE. PROVIDE WITH UNIVERSAL DRIVER. PROVIDE WITH 0-10V DIMMING DRIVER. 4000K COLOR TEMPERATURE. SYMMETRIC, FROST OPTIC. 11,000 LUMENS/4FT. LAMPS: 88.2W LED MANUF: COOPER 4LBLED-11-SF SERIES
CE	SAME AS 'C' BUT WITH 90-MIN BATTERY BACKUP.
D	4' LED UTILITY STRIP. PROVIDE WITH UNIVERSAL VOLTAGE DRIVER. CHAIN-HUNG. COORDINATE COLOR TEMPERATURE, FINISH, AND ALL OTHER OPTIONS WITH ARCHITECT. LAMPS: 38W LED MANUF: COOPER SNLED SERIES
FE	4' LED WALL-MOUNTED FIXTURE. PROVIDE WITH UNIVERSAL VOLTAGE DRIVER. COORDIINATE COLOR TEMPERATURE, FINISH, AND ALL OTHER OPTIONS WITH ARCHITECT. PROVIDE WITH 90-MINUTE BATTERY BACKUP. PROVIDE WITH INTEGRAL MOTION SENSOR SUCH THAT FIXTURE DIMS TO 50% WHEN NO OCCUPANCY IS SENSED. LAMPS: 38W LED MANUF: COOPER 4SWLED SERIES
G	LED WALL PACK. PROVIDE WITH UNIVERSAL VOLTAGE DRIVER. COORDINATE COLOR TEMPERATURE, FINISH, AND ALL OTHER OPTIONS WITH ARCHITECT. LAMPS: 12.3W LED MANUF: BEGA 24374 SERIES
GE	SAME AS 'G' BUT WITH 90-MIN BATTERY BACK UP.
H	6" RECESSED LED DOWNLIGHT. PROVIDE WITH UNIVERSAL VOLTAGE DRIVER. PROVIDE WITH 0-10V DIMMING DRIVER. 4000K COLOR TEMPERATURE. 1500 LUMENS. 80 CRI. LAMPS: 14.3W LED MANUF: COOPER LB6B15-M SERIES
I	POLE MOUNTED LED FIXTURE WITH ONE HEAD. PROVIDE WITH 20' POLE. POLE SHALL BE RATED FOR HURRICANE FORCE WINDS. COORDINATE POLE BASE WITH ARCHITECT. PROVIDE WITH UNIVERSAL VOLTAGE DRIVER. TYPE V SQUARE WIDE OPTICS. 4000K COLOR TEMPERATURE. 70 CRI. LAMPS: 108W LED MANUF: COOPER GALN SERIES
J	POLE MOUNTED LED FIXTURE WITH ONE HEAD. PROVIDE WITH 20' POLE. POLE SHALL BE RATED FOR HURRICANE FORCE WINDS. COORDINATE POLE BASE WITH ARCHITECT. PROVIDE WITH UNIVERSAL VOLTAGE DRIVER. TYPE-IV FORWARD THROW OPTICS. 4000K COLOR TEMPERATURE. 70 CRI. LAMPS: 108W LED MANUF: COOPER GALN SERIES
K	4' LED VAPORTITE UTILITY STRIP. PROVIDE WITH UNIVERSAL VOLTAGE DRIVER. CHAIN-HUNG. COORDINATE COLOR TEMPERATURE, FINISH, AND ALL OTHER OPTIONS WITH ARCHITECT. WET LOCATION. LAMPS: 38W LED LAMPT: COOPER VT2 SERIES
X	LED EDGE-LIT EXIT SIGN WITH CONTINUOUS ILLUMINATION. PROVIDE WITH UNIVERSAL VOLTAGE DRIVER. PROVIDE MIRRORED BACKING FOR SINGLE FACED. PROVIDE DIRECTIONAL ARROWS, DOUBLE OR SINGLE FACE AS INDICATED ON DRAWINGS. PROVIDE WITH 90-MINUTE BATTERY BACKUP. LAMPS: COOPER ES SERIES

ELECTRICAL SYMBOL LEGEND

SYMBOL	DESCRIPTION	ON CENTER MTG. HT.
	CONCEALED CONDUIT IN CEILING OR WALL	
	CONCEALED CONDUIT IN FLOOR OR UNDERGROUND	
	CIRCUIT HOMERUN TO PANEL; EACH ARROWHEAD = 1 CIRCUIT 2#12,1#12G.,1/2"C. UNLESS NOTED OTHERWISE	
	NO. OF CONDUCTORS IN CONDUIT; EACH CROSSHATCH = 1 WIRE	
	CONDUIT STUBBED UP OR TURNED DOWN	
	MULTI OUTLET SURFACE MOUNTED RACEWAY	
	PLYWOOD BACKBOARD	
	WALL MOUNTED DUPLEX RECEPTACLE OUTLET	18"
	WALL MOUNTED G.F.C.I. DUPLEX RECEPTACLE OUTLET	18"
	WALL MOUNTED DOUBLE DUPLEX RECEPTACLE OUTLET	18"
	WALL MOUNTED SPECIAL RECEPTACLE OUTLET	18"
J	JUNCTION BOX – SIZE AND MOUNTING AS REQUIRED	AS REQ'D.
JCP	JUNCTION BOX FOR CONNECTION OF CONDENSATE PUMP. COORDINATE WITH DIVISION 23.	AS REQ'D.
	WALL MOUNTED DATA/TELEPHONE OUTLET	18"
	120/208 VOLT PANELBOARD	
	WALL MOUNTED S.P.S.T. TOGGLE SWITCH	48"
OV	WALL MOUNTED LOW VOLTAGE ON/OFF OVERRIDE SWITCH INTERFACE WITH LIGHTING CONTROL PANEL	48"
D(XXX)	WALL MOUNTED DIMMER SWITCH. SWITCH SHALL BE FULLY COMPATIBLE WITH DIMMING BALLAST OR LED DRIVER (WATTAGE AS REQUIRED).	48"
OS	WALL MOUNTED OCCUPANCY SENSOR SWITCH (GREENGATE ONW-D-1001-MV)	48"
V	WALL MOUNTED VACANCY SENSOR SWITCH (GREENGATE ONW-D-1001-MV)	48"
LV	WALL MOUNTED LOW VOLTAGE MOMENTARY SWITCH. INTERFACE WITH LOCAL SWITCHPACK SERVING THE AREA. (GREENGATE GDMS SERIES)	48"
OS	DUAL TECHNOLOGY CEILING MOUNTED OCCUPANCY SENSOR (GREENGATE OAC-DT-2000 SERIES)	
VS	DUAL TECHNOLOGY CEILING MOUNTED VACANCY SENSOR (GREENGATE OAC-DT-2000 SERIES)	
PP	OCCUPANCY SENSOR ON/OFF SWITCHPACK (GREENGATE SP20 SERIES)	
L	DUAL TECHNOLOGY WALL MOUNTED OCCUPANCY SENSOR. INTERFACE WITH LOCAL SWITCHPACK SERVING THE AREA. (GREENGATE OAWC-DT SERIES)	
M	MOTOR RATED TOGGLE SWITCH	AS REQ'D.
30/3	DISCONNECT SWITCH (FRAME/POLES/FUSE-IF REQUIRED)	
	EXIT SIGN – CEILING,WALL MT.	
AFF/AFG	ABOVE FINISHED FLOOR/ABOVE FINISHED GRADE	
BC	BELOW CEILING	
AC	ABOVE COUNTER	
WP	WEATHER PROOF	
EX/R/N	EXISTING/RELOCATED/NEW	
M	MOTORIZED DAMPER. COORDINATE FINAL LOCATION AND CONNECTION REQUIREMENTS WITH DIVISION 23.	
	ON-GRADE FLOOR BOX FOR POWER AND DATA CONNECTIONS. PROVIDE WITH (2) DUPLEX RECEPTACLES AND (2) DATA OUTLETS. PROVDE (1) 1-1/4"C TO ABOVE ACCESSIBLE CEILING FOR LOW VOLTAGE CONNECTIONS. COORDINATE EXACT LOCATION AND REQUIREMENTS WITH ARCHITECT/FURNITURE VENDOR PRIOR TO ROUGH-IN AND INSTALLATION. (WIREMOLD RF4BE-OG SERIES OR EQUAL)	

BW&A
Barrett, Woodyard & Associates, Inc.

3495 Holcomb Bridge Road
Norcross, GA 30092
Phone (770) 810-8800
Fax (770) 810-8808

PROFESSIONAL ENGINEER
JASON CLARK
0-56990-1B
U.S. VIRGIN ISLANDS

No.	Drawing Issue Description	Date
1	Issued for Permit	06/30/23

DPW MAINTENANCE BUILDING

PARCEL NO. 6A
ESTATE SUSANNABERG
ST. JOHN, U.S VIRGIN ISLANDS

ELECTRICAL LEGEND, SCHEDULES, AND GENERAL NOTES

S. BREWER	2022-1512
PROJECT MANAGER	PROJECT NO.
J. CLARK	AS NOTED
PROJECT ENGINEER	SCALE
L. ORTIZ	06/30/23
DRAWN BY	DATE
	E000
FILE PLOT DATE	DRAWING NO.

ISSUED FOR CONSTRUCTION

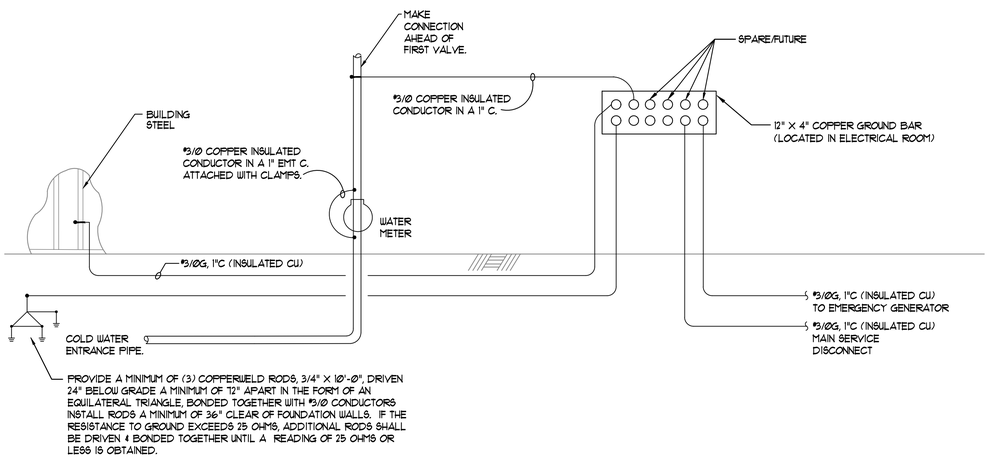

1 / E001 ELECTRICAL GROUND BAR DETAIL

NOT TO SCALE

GENERAL NOTES:
(APPLY TO THIS DETAIL ONLY)

1. ALL GROUNDING CONDUCTORS SHALL BE INSULATED COPPER UNLESS NOTED OTHERWISE.
2. SEE ELECTRICAL RISER DIAGRAM FOR MORE INFORMATION REGARDING EQUIPMENT.
3. GROUND PER ARTICLE 250 OF THE NEC.
4. DRAWING IS DESIGN INTENT ONLY. FIELD COORDINATE EXACT LOCATION AND MOUNTING HEIGHT OF GROUND BAR.

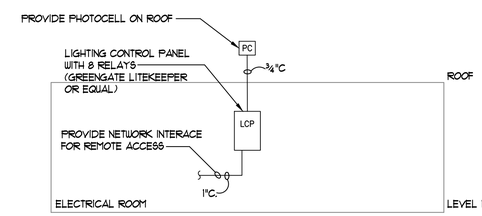

2 / E001 LIGHTING CONTROL RISER DIAGRAM

NO SCALE

NOTE:
THIS LIGHTING CONTROL SYSTEM SHALL AUTOMATICALLY SWITCH LIGHTING CIRCUITS ON AND OFF AT PREPROGRAMMED TIMES AS SCHEDULED BY THE OWNER WHEN LIGHTS ARE IN THE OFF STATE, ACTUATION OF ANY OVERRIDE SWITCH WILL TURN THE LIGHTS IN THAT SWITCHES ZONE ON FOR UP TO (BUT NOT EXCEEDING) TWO HOURS.

LIGHTING CONTROL NOTES:

1. COORDINATE SETTINGS OF CONTROL SYSTEM WITH OWNER.
2. CONTRACTOR SHALL PROVIDE A COMPLETE INSTALLATION. PROVIDE ANY ADDITIONAL COMPONENTS AND ACCESSORIES AS NECESSARY. COORDINATE PROGRAMMING WITH OWNER.

BW&A
Barrett, Woodyard & Associates, Inc.

3495 Holcomb Bridge Road
Norcross, GA 30092
Phone (770) 810-8800
Fax (770) 810-8808

PROFESSIONAL ENGINEER
JASON CLARK
0-56990-1B
U.S. VIRGIN ISLANDS

No.	Drawing Issue Description	Date
1	Issued for Permit	06/30/23

DPW MAINTENANCE BUILDING

PARCEL NO. 6A
ESTATE SUSANNABERG
ST. JOHN, U.S VIRGIN ISLANDS

ELECTRICAL DETAILS

S. BREWER	2022-1512
PROJECT MANAGER	PROJECT NO.
J. CLARK	AS NOTED
PROJECT ENGINEER	SCALE
L. ORTIZ	06/30/23
DRAWN BY	DATE
	E001
FILE PLOT DATE	DRAWING NO.

ISSUED FOR CONSTRUCTION

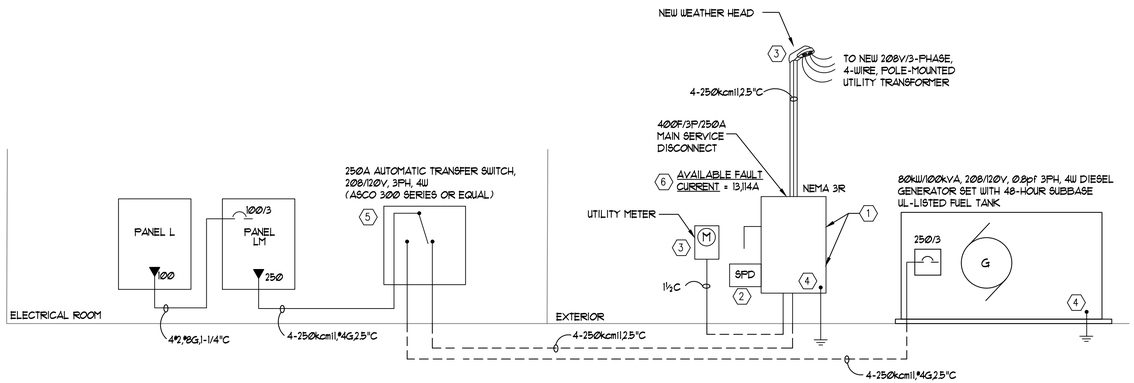

1 / E002 ELECTRICAL RISER DIAGRAM

NO SCALE

GENERAL NOTES:
(APPLY TO THIS SHEET ONLY)

1. WIRE SIZES ARE FOR COPPER CONDUCTORS.
2. CONTRACTOR TO VERIFY EQUIPMENT WILL FIT IN LOCATIONS AS SHOWN TO INSTALLATION.
3. REFER TO PANELBOARD SCHEDULES FOR ADDITIONAL INFORMATION.
4. PROVIDE ARC-FLASH RATINGS ON ALL PANELBOARDS.
5. AVAILABLE FAULT CURRENTS ARE INDICATED ADJACENT TO EACH PANELBOARD. WHERE NO VALUE IS SHOWN, THE CALCULATED VALUE IS LESS THAN THE MINIMUM RATING. PROVIDE FULLY RATED PANELS/BREAKERS THAT EQUAL OR EXCEED VALUES INDICATED FOR ALL PANELS RATED 800 AMPS AND ABOVE. ALL PANELS RATED LESS THAN 800 AMPS SHALL BE U.L. SERIES RATED TO MEET OR EXCEED VALUES INDICATED. SHOP DRAWINGS SHALL INCLUDE ALL RATINGS.
6. PROVIDE ENGRAVED NAMEPLATES FOR ALL ELECTRICAL EQUIPMENT INCLUDING TRANSFER SWITCH, PANELBOARDS, DISCONNECTS, ETC.

LEGEND NOTES:
(APPLY TO THIS SHEET ONLY)

1. PROVIDE WEATHERHEAD AND SERVICE-RATED FUSIBLE MAIN DISCONNECT SWITCH.
2. PROVIDE WITH TYPE 1 SURGE PROTECTION DEVICE EXTERNAL TO DISCONNECT. MAXIMUM FEEDER LENGTH SHALL BE 2', MINIMIZE BENDING OF CONNECTION. DEVICE SHALL BE CURRENT TECHNOLOGY SEL3 OR EQUAL BY EATON, ABB, OR SCHNEIDER ELECTRIC. PROVIDE WITH NEMA 3R ENCLOSURE.
3. COORDINATE ALL METERING REQUIREMENTS WITH POWER COMPANY. PROVIDE WEATHERHEAD AND CONDUIT WITH PIGTAIL AS SHOWN. PROVIDE AND INSTALL CURRENT TRANSFORMERS (CT'S) AND ALL ADDITIONAL MATERIAL AND/OR EQUIPMENT AS REQUIRED.
4. PROVIDE CONNECTION BETWEEN ALL SYSTEM GROUNDS (MAIN DISCONNECT AND GENERATOR) TO MAKE ONE GROUNDING SYSTEM.
5. PROVIDE START CONTACT MONITORING SOLUTION THAT CHECKS THE INTEGRITY OF THE GENERATOR REMOTE START CIRCUIT. THE CIRCUIT SHOULD BE MONITORED FOR BROKEN, DISCONNECTED, OR SHORTED WIRES. LOSS OF INTEGRITY SHALL ANNUNCIATE AN ALARM AT THE GENERATOR CONTROLLER AND SHALL START THE GENERATOR.
6. COORDINATE EXACT FAULT CURRENT WITH UTILITY COMPANY PRIOR TO RUNNING STUDIES AS REQUIRED BY SPECIFICATIONS.

(NEW) **PANEL LM**

VOLTAGE: 208 / 120 AMP: 250
PHASE: 3 MAIN: MLO

DESCRIPTION	KW	BKR	CK	PH	CK	BKR	KW	DESCRIPTION
BAY 08 DOOR DISCONNECT	1.0	20/2	1	A	2	15/2	0.4	FCU-2
-----	1.0	---	3	B	4	---	0.4	-----
BAY 09 DOOR DISCONNECT	1.0	20/2	5	C	6	20/1	0.5	CODENSATE PUMPS FCUs
-----	1.0	---	7	A	8	15/2	1.3	CU-1
BAY 13 DOOR DISCONNECT	1.0	20/2	9	B	10	---	1.3	-----
-----	1.0	---	11	C	12	20/2	1.8	CU-2
BAY 14 DOOR DISCONNECT	1.0	20/2	13	A	14	---	1.8	-----
-----	1.0	---	15	B	16	30/1	1.7	EF-3
BAY 09 PLAN NORTH DIS.	2.0	30/3	17	C	18	20/1	0.5	EF-4
-----	2.0	---	19	A	20	15/3	1.3	WH-1
-----	2.0	---	21	B	22	---	1.3	-----
BAY 13 PLAN NORTH DIS.	2.2	50/3	23	C	24	---	1.3	-----
-----	2.2	---	25	A	26	20/2	1.0	BP-1
-----	2.2	---	27	B	28	---	1.0	-----
BAY 13 NEMA L6-20R	1.0	20/2	29	C	30	30/3	2.0	BAY 14 PLAN EAST DIS.
-----	1.0	---	31	A	32	---	2.0	-----
BAY 13 NEMA L6-20R	1.0	20/2	33	B	34	---	2.0	-----
-----	1.0	---	35	C	36	20/1		SPARE
EF-1 & EF-2 & HWRP-1	0.2	20/1	37	A	38	20/1		SPARE
FCU-1	0.4	15/2	39	B	40	20/1		SPARE
-----	0.4	---	41	C	42	20/1		SPARE
MOTOR OPERATED DMPS.	0.4	20/1	43	A	44	20/1		SPARE
TEF-1 & MOTOR DAMPERS	0.3	20/1	45	B	46	20/1		SPARE
EF-5	0.5	20/1	47	C	48	20/1		SPARE
VEHICLE EX. FAN	0.8	25/3	49	A	50	20/1		SPARE
-----	0.8	---	51	B	52	20/1		SPARE
-----	0.8	---	53	C	54	20/1		SPARE
SPARE		20/1	55	A	56	100/3	8.4	PANEL L
SPARE		20/1	57	B	58	---	9.0	-----
SPARE		20/1	59	C	60	---	9.4	-----

Phase A Load (kVA)	25.8	Connected kVA	77.4	98%	A-B Balance
Phase B Load (kVA)	26.3	Dem. kVA	59.6	96%	B-C Balance
Phase C Load (kVA)	25.3	Dem. Amps	165.6	98%	C-A Balance

(NEW) **PANEL L**

VOLTAGE: 208 / 120 AMP: 100
PHASE: 3 MAIN: MLO

	DESCRIPTION	KW	BKR	CK	PH	CK	BKR	KW	DESCRIPTION
	MECH/ELEC 19 QUAD	0.4	20/1	1	A	2	20/1	0.2	REC GENERATOR ENCLOS
	PUMP ROOM 22 REC	0.2	20/1	3	B	4	20/1		SPARE
	EXTERIOR/MECH/ELEC REC	0.5	20/1	5	C	6	20/1	1.0	D-REC FRIDGE 04
	CONFERENCE RM. 05 REC	1.3	20/1	7	A	8	20/1	1.5	D-REC MICROWAVE 04
	OFFICE 02, LOBBY 01 REC	1.3	20/1	9	B	10	40/2	3.3	J-BOX RANGE 04
	JANITOR 20, RRs REC	1.1	20/1	11	C	12	---	3.3	-----
	BAY 08 AND BAY 09 REC	1.3	20/1	13	A	14	20/1	0.2	DED EXTERIOR REC
#	BAY 08 REC.	0.2	20/1	15	B	16	20/2	1.0	MOTORIZE GATE CONN.
	BAY 08 REEL LIGHT CONN.	0.5	20/1	17	C	18	---	1.0	-----
	BAY 09 REEL LIGHT CONN.	0.5	20/1	19	A	20	20/1	0.1	J-BOX HOOD 04
	BAY 13 REC	0.9	20/1	21	B	22	20/1	0.2	LTS CONTROL PANEL
	BAY 14 REC	1.1	20/1	23	C	24	20/1		SPARE
	MEZZANINE 26 REC	1.1	20/1	25	A	26	20/1		SPARE
	CONF RM. 05, 02, 01, 04 LTS	0.6	20/1	27	B	28	20/1		SPARE
	EXTERIOR LTS	0.3	20/1	29	C	30	20/1		SPARE
	BAY 08,09, AND 13 LTS	1.8	20/1	31	A	32	20/1		SPARE
	BAY 14 LTS	0.9	20/1	33	B	34	20/1		SPARE
	MEZZANINE 26 LTS	0.6	20/1	35	C	36	20/1		SPARE
	POLE SITE LIGHTING	0.3	20/1	37	A	38	20/1		SPARE
	GENERATOR BATT CHGR	0.5	20/1	39	B	40	20/1		SPARE
	SPARE		20/1	41	C	42	20/1		SPARE

- PROVIDE CONNECTION TO NEW GFCI CIRCUIT BREAKER

Phase A Load (kVA)	8.4	Connected kVA	26.9	93%	A-B Balance
Phase B Load (kVA)	9.0	Dem. kVA	23.6	96%	B-C Balance
Phase C Load (kVA)	9.4	Dem. Amps	65.6	90%	C-A Balance

BW&A

Barrett, Woodyard & Associates, Inc.

3495 Holcomb Bridge Road
Norcross, GA 30092
Phone (770) 810-8800
Fax (770) 810-8808

PROFESSIONAL ENGINEER
JASON CLARK
0-56990-1B
U.S. VIRGIN ISLANDS

No.	Drawing Issue Description	Date
1	Issued for Permit	06/30/23

DPW MAINTENANCE BUILDING

PARCEL NO. 6A
ESTATE SUSANNABERG
ST. JOHN, U.S VIRGIN ISLANDS

ELECTRICAL RISER DIAGRAM

S. BREWER	2022-1512
PROJECT MANAGER	PROJECT NO.
J. CLARK	AS NOTED
PROJECT ENGINEER	SCALE
L. ORTIZ	06/30/23
DRAWN BY	DATE
	E002
FILE PLOT DATE	DRAWING NO.

ISSUED FOR CONSTRUCTION

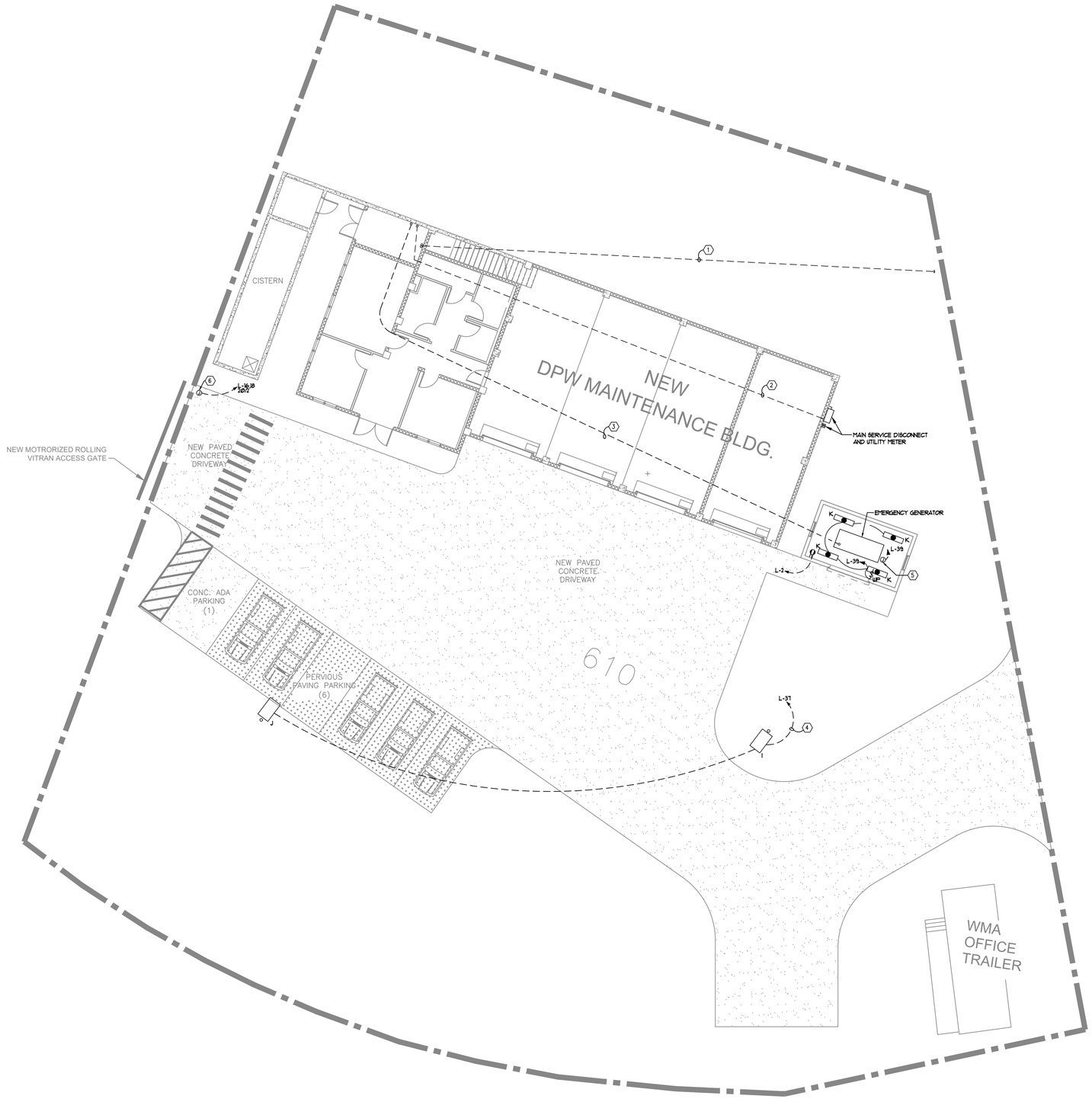

1 E100 SITE PLAN – ELECTRICAL & LIGHTING
3/32"=1'-0"

7 POLE MOUNTED UTILITY TRANSFORMER

GENERAL NOTES:
(APPLY TO THIS SHEET ONLY)

1. DRAWINGS ARE FOR DESIGN INTENT ONLY. COORDINATE EXACT TERMINATION POINTS AND LOCATIONS OF ALL CONDUITS IN THE FIELD COORDINATE EXACT CONDUIT ROUTING AND STUB-UP LOCATIONS WITH ARCHITECT AND CIVIL ENGINEER.
2. PROVIDE ALL EMPTY CONDUITS WITH PULLSTRINGS.
3. PROVIDE CONDUITS NECESSARY FOR SYSTEM GROUNDING AS REQUIRED. REFER TO GROUNDING DETAILS AND ELECTRICAL RISER DIAGRAM FOR ADDITIONAL DETAILS.

LEGEND NOTES:
(APPLY TO THIS SHEET ONLY)

1. PROVIDE (2) 2" CONDUITS BETWEEN MECH/ELEC ROOM AND NEAREST TELEPHONE POLE FOR LOW VOLTAGE SERVICE INTO BUILDING. COORDINATE EXACT LOCATION AND REQUIREMENTS WITH OWNER, ARCHITECT, AND CIVIL ENGINEER.
2. PROVIDE (1) 2.5"" CONDUIT BETWEEN MAIN SERVICE DISCONNECT, PANEL, AND AUTOMATIC TRANSFER SWITCH. REFER TO ELECTRICAL RISER DIAGRAM FOR FURTHER DETAILS.
3. PROVIDE (1) 2.5" CONDUIT AND (1) 1" CONDUIT BETWEEN EMERGENCY GENERATOR AND AUTOMATIC TRANSFER SWITCH. REFER TO ELECTRICAL RISER DIAGRAM FOR FURTHER DETAILS.
4. ROUTE CIRCUIT THROUGH LIGHTING CONTROL PANEL. CIRCUIT SHALL TURN OFF WHEN THERE IS SUFFICIENT DAYLIGHT AVAILABLE.
5. PROVIDE WEATHERPROOF JUNCTION BOXES FOR POWER CONNECTIONS TO GENERATOR BATTERY CHARGER. COORDINATE WITH GENERATOR MANUFACTURER FOR FURTHER DETAILS.
6. PROVIDE JUNCTION BOX FOR CONNECTION TO MOTORIZED GATE. COORDINATE EXACT REQUIREMENTS WITH ARCHITECT/VENDOR.
7. COORDINATE WITH UTILITY COMPANY FOR EXACT REQUIREMENTS AND LOCATION OF UTILITY POLE/TRANSFORMER.

BW&A
Barrett, Woodyard & Associates, Inc.

3495 Holcomb Bridge Road
Norcross, GA 30092
Phone (770) 810-8800
Fax (770) 810-8808

PROFESSIONAL ENGINEER
JASON CLARK
0-56990-1B
U.S. VIRGIN ISLANDS

No.	Drawing Issue Description	Date
1	Issued for Permit	06/30/23

DPW MAINTENANCE BUILDING

PARCEL NO. 6A
ESTATE SUSANNABERG
ST. JOHN, U.S VIRGIN ISLANDS

ELECTRICAL SITE PLAN

S. BREWER	2022-1512
PROJECT MANAGER	PROJECT NO.
J. CLARK	AS NOTED
PROJECT ENGINEER	SCALE
L. ORTIZ	06/30/23
DRAWN BY	DATE
	E100
FILE PLOT DATE	DRAWING NO.

ISSUED FOR CONSTRUCTION

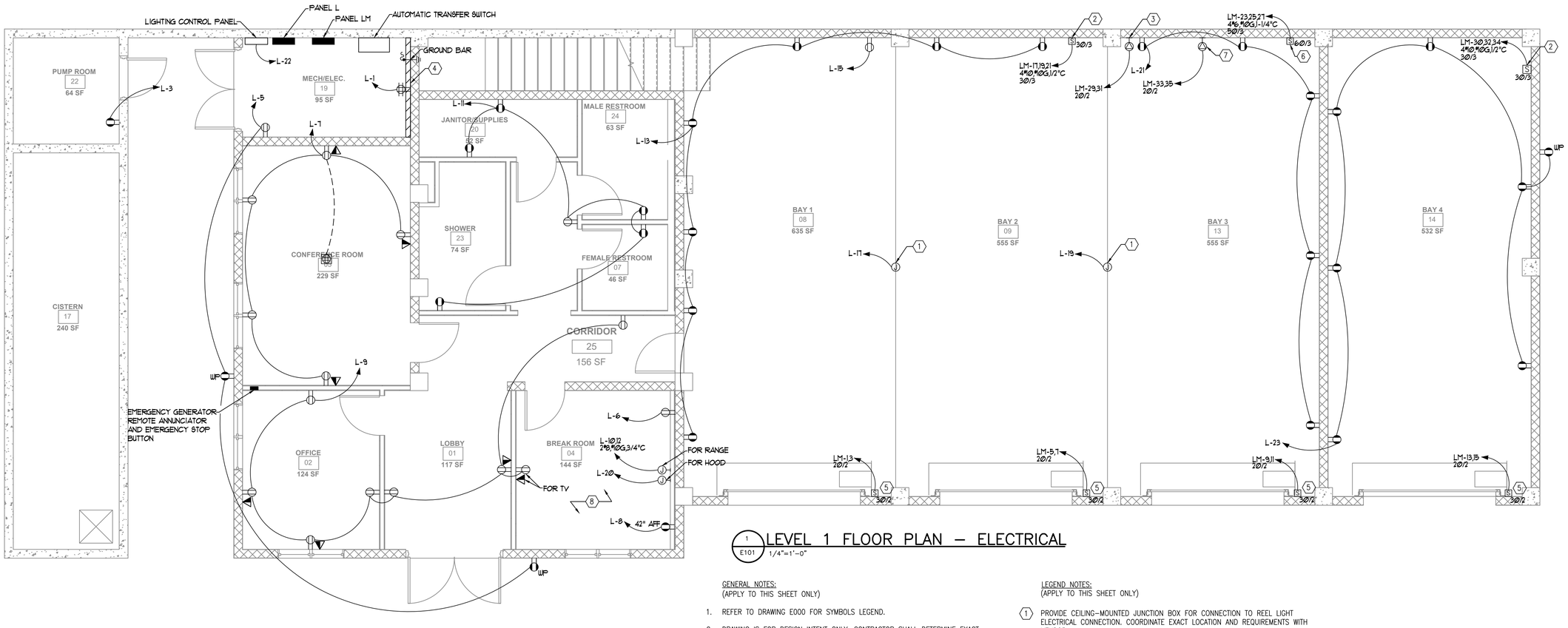

1 LEVEL 1 FLOOR PLAN – ELECTRICAL

E101 1/4"=1'-0"

GENERAL NOTES:
(APPLY TO THIS SHEET ONLY)

1. REFER TO DRAWING E000 FOR SYMBOLS LEGEND.
2. DRAWING IS FOR DESIGN INTENT ONLY. CONTRACTOR SHALL DETERMINE EXACT CONDUIT ROUTING IN THE FIELD WITH ALL OTHER TRADES.
3. COORDINATE EXACT LOCATION AND MOUNTING HEIGHTS OF ALL DEVICES WITH ARCHITECT. DEVICE AND COVERPLATE FINISHES TO BE SELECTED BY ARCHITECT.
4. COORDINATE EXACT LOCATION AND REQUIREMENTS OF LOW VOLTAGE AND SECURITY SYSTEMS WITH RESPECTIVE CONSULTANT AND ARCHITECT. PROVIDE ALL CONDUITS, JUNCTION BOXES, PULL BOXES, ETC. INDICATED ON CONSULTANT'S PLANS.
5. COORDINATE ALL THROUGH FLOOR STUB-UP LOCATIONS WITH STRUCTURE AND ARCHITECT. FLOOR PENETRATIONS SHALL BE FIRE SEALED AS REQUIRED.
6. VERIFY ELECTRICAL REQUIREMENTS AND RECEPTACLE NEMA TYPES FOR EQUIPMENT WITH EQUIPMENT SUPPLIER/SUBMITTAL PRIOR TO INSTALLATION.
7. COORDINATE EXACT ELECTRICAL REQUIREMENTS AND LOCATIONS FOR ALL PLUMBING AND MECHANICAL EQUIPMENT WITH DIVISION 22 AND 23, RESPECTIVELY. PROVIDE FUSED DISCONNECTS AS REQUIRED BY MANUFACTURER'S RECOMMENDATIONS. PROVIDE NEUTRAL CONDUCTORS IF REQUIRED BY MANUFACTURER.
8. PROVIDE PULLSTRING IN ALL EMPTY CONDUITS.
9. MAINTAIN FIRE RESISTANCE RATING OF WALL WITH PENETRATIONS AND RECESSED OUTLET BOXES. MAINTAIN SPACING PER IBC AND MANUFACTURER. PROVIDE UL FIRE STOPPING AS REQUIRED.

LEGEND NOTES:
(APPLY TO THIS SHEET ONLY)

1. PROVIDE CEILING-MOUNTED JUNCTION BOX FOR CONNECTION TO REEL LIGHT ELECTRICAL CONNECTION. COORDINATE EXACT LOCATION AND REQUIREMENTS WITH VENDOR.
2. PROVIDE DISCONNECT SWITCH FOR POWER CONNECTION TO HYDRAULIC LIFT. DISCONNECT TO BE LOCATED WITHIN LINE OF SIGHT OF LIFT. COORDINATE EXACT ELECTRICAL REQUIREMENTS WITH VENDOR AND PROVIDE FINAL CONNECTIONS/TERMINATIONS AS REQUIRED.
3. PROVIDE L6-20R NEMA RECEPTACLE FOR CONNECTIONS TO VEHICLE TIRE CHANGING EQUIPMENT. COORDINATE EXACT ELECTRICAL REQUIREMENTS AND LOCATION WITH ARCHITECT/OWNER PRIOR TO INSTALLATION.
4. PROVIDE A 3/4" THICK, 8' HIGH PLYWOOD TELEPHONE BACKBOARD ACROSS WALL AS SHOWN. PROVIDE GROUND CONNECTIONS TO LADDER RACK, ANTI-STATIC FLOOR, AND ALL EQUIPMENT IN ROOM (AS APPLICABLE). PAINT BACKBOARD WITH (2) COATS OF FLAME RETARDANT SEALANT TO MATCH WALL COLOR. COORDINATE EXACT LOCATION WITH ARCHITECT/TENANT.
5. PROVIDE DISCONNECT SWITCH FOR CONNECTION TO MOTORIZED DOOR. PROVIDE 1" CONDUIT TO UP/DOWN SWITCH LOCATION. COORDINATE EXACT REQUIREMENTS WITH ARCHITECT/TENANT PRIOR TO INSTALLATION.
6. PROVIDE DISCONNECT SWITCH FOR CONNECTION TO AIR COMPRESSOR. COORDINATE EXACT REQUIREMENTS WITH ARCHITECT/TENANT PRIOR TO INSTALLATION.
7. PROVIDE L6-20R NEMA RECEPTACLE FOR CONNECTIONS TO HEAVY EQUIPMENT. COORDINATE EXACT ELECTRICAL REQUIREMENTS AND LOCATION WITH ARCHITECT/OWNER PRIOR TO INSTALLATION.
8. CONFIRM FINAL LOCATIONS AND EXACT REQUIREMENTS FOR APPLIANCES WITH ARCHITECT.

BW&A
Barrett, Woodyard & Associates, Inc.

3495 Holcomb Bridge Road
Norcross, GA 30092
Phone (770) 810-8800
Fax (770) 810-8808

PROFESSIONAL ENGINEER
JASON CLARK
0-56990-1B
U.S. VIRGIN ISLANDS

No.	Drawing Issue Description	Date
1	Issued for Permit	06/30/23

DPW MAINTENANCE BUILDING

PARCEL NO. 6A
ESTATE SUSANNABERG
ST. JOHN, U.S VIRGIN ISLANDS

FLOOR 01 - ELECTRICAL PLAN

S. BREWER	2022-1512
PROJECT MANAGER	PROJECT NO.
J. CLARK	AS NOTED
PROJECT ENGINEER	SCALE
L. ORTIZ	06/30/23
DRAWN BY	DATE
	E101
FILE PLOT DATE	DRAWING NO.

ISSUED FOR CONSTRUCTION

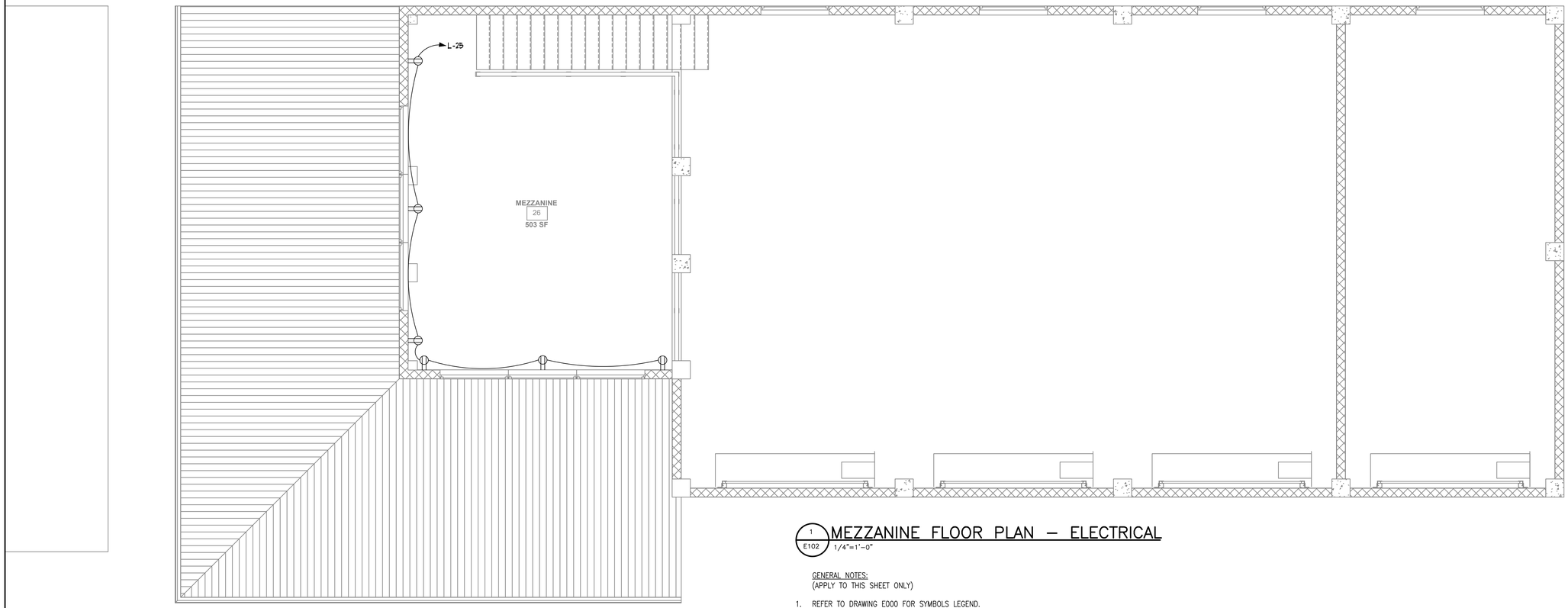

1 E102 MEZZANINE FLOOR PLAN – ELECTRICAL
1/4"=1'-0"

GENERAL NOTES:
(APPLY TO THIS SHEET ONLY)

1. REFER TO DRAWING E000 FOR SYMBOLS LEGEND.
2. DRAWING IS FOR DESIGN INTENT ONLY. CONTRACTOR SHALL DETERMINE EXACT CONDUIT ROUTING IN THE FIELD WITH ALL OTHER TRADES.
3. COORDINATE EXACT LOCATION AND MOUNTING HEIGHTS OF ALL DEVICES WITH ARCHITECT. DEVICE AND COVERPLATE FINISHES TO BE SELECTED BY ARCHITECT.
4. COORDINATE EXACT LOCATION AND REQUIREMENTS OF LOW VOLTAGE AND SECURITY SYSTEMS WITH RESPECTIVE CONSULTANT AND ARCHITECT. PROVIDE ALL CONDUITS, JUNCTION BOXES, PULL BOXES, ETC. INDICATED ON CONSULTANT'S PLANS.
5. COORDINATE ALL THROUGH FLOOR STUB-UP LOCATIONS WITH STRUCTURE AND ARCHITECT. FLOOR PENETRATIONS SHALL BE FIRE SEALED AS REQUIRED.
6. VERIFY ELECTRICAL REQUIREMENTS AND RECEPTACLE NEMA TYPES FOR EQUIPMENT WITH EQUIPMENT SUPPLIER/SUBMITTAL PRIOR TO INSTALLATION.
7. COORDINATE EXACT ELECTRICAL REQUIREMENTS AND LOCATIONS FOR ALL PLUMBING AND MECHANICAL EQUIPMENT WITH DIVISION 22 AND 23, RESPECTIVELY. PROVIDE FUSED DISCONNECTS AS REQUIRED BY MANUFACTURER'S RECOMMENDATIONS. PROVIDE NEUTRAL CONDUCTORS IF REQUIRED BY MANUFACTURER.
8. PROVIDE PULLSTRING IN ALL EMPTY CONDUITS.
9. MAINTAIN FIRE RESISTANCE RATING OF WALL WITH PENETRATIONS AND RECESSED OUTLET BOXES. MAINTAIN SPACING PER IBC AND MANUFACTURER. PROVIDE UL FIRE STOPPING AS REQUIRED.

BW&A
Barrett, Woodyard & Associates, Inc.

3495 Holcomb Bridge Road
Norcross, GA 30092
Phone (770) 810-8800
Fax (770) 810-8808

PROFESSIONAL ENGINEER
JASON CLARK
0-56990-1B
U.S. VIRGIN ISLANDS

No.	Drawing Issue Description	Date
1	Issued for Permit	06/30/23

DPW MAINTENANCE BUILDING

PARCEL NO. 6A
ESTATE SUSANNABERG
ST. JOHN, U.S VIRGIN ISLANDS

FLOOR 02 - ELECTRICAL PLAN

S. BREWER	2022-1512
PROJECT MANAGER	PROJECT NO.
J. CLARK	AS NOTED
PROJECT ENGINEER	SCALE
L. ORTIZ	06/30/23
DRAWN BY	DATE
	E102
FILE PLOT DATE	DRAWING NO.

ISSUED FOR CONSTRUCTION

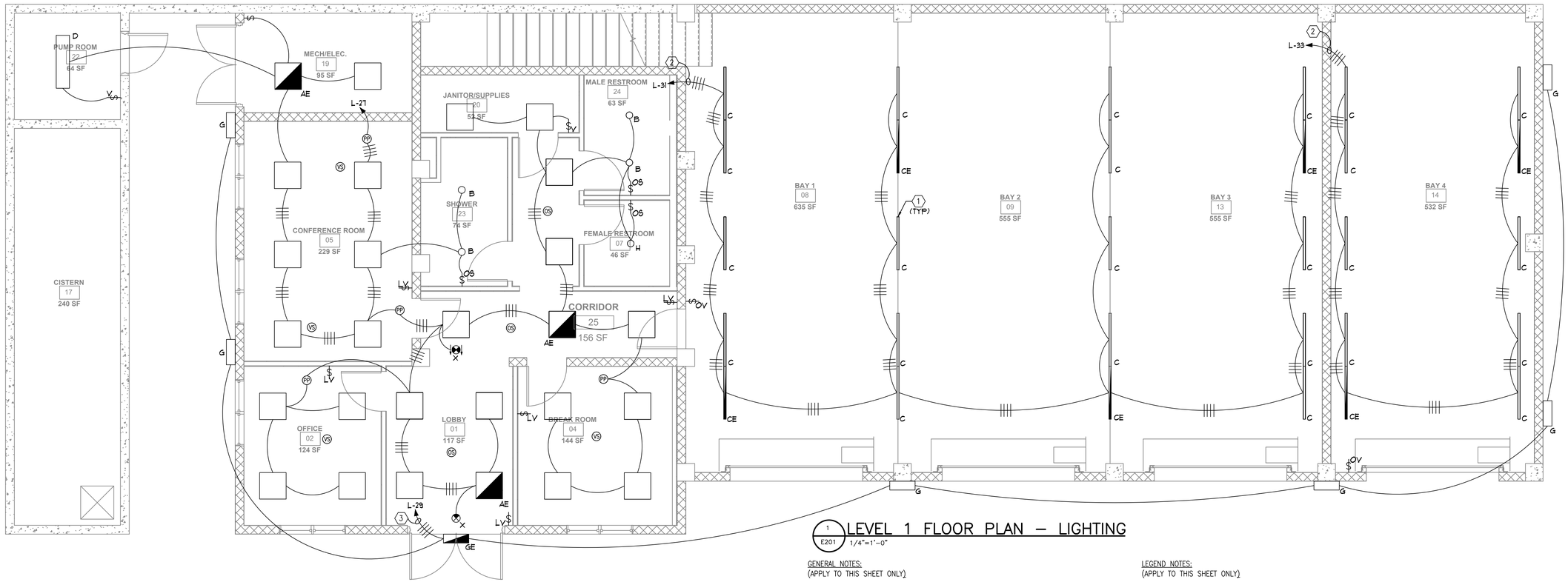

LEVEL 1 FLOOR PLAN – LIGHTING

1 / E201 — 1/4"=1'-0"

GENERAL NOTES:
(APPLY TO THIS SHEET ONLY)

1. ALL LIGHT FIXTURES SHALL BE TYPE "A" UNLESS NOTED OTHERWISE.
2. REFER TO DRAWING E000 FOR SYMBOLS LEGEND AND LIGHTING FIXTURE SCHEDULE.
3. DRAWING IS FOR DESIGN INTENT ONLY. CONTRACTOR SHALL DETERMINE EXACT CONDUIT ROUTING IN THE FIELD.
4. MAINTAIN FIRE RESISTANCE RATING OF WALLS WITH PENETRATIONS AND RECESSED OUTLET BOXES. MAINTAIN SPACING PER IBC AND MANUFACTURER. PROVIDE UL FIRE STOPPING AS REQUIRED.
5. COORDINATE COLOR/FINISH OF FIXTURES AND COVERPLATES WITH ARCHITECT.

LEGEND NOTES:
(APPLY TO THIS SHEET ONLY)

1. SUSPEND LIGHT FIXTURES IN BAYS AT 17'-0" AFF.
2. ROUTE CIRCUIT THROUGH LIGHTING CONTROL PANEL FOR TIME SCHEDULE CONTROL.
3. ROUTE CIRCUIT THROUGH LIGHTING CONTROL PANEL FOR PHOTOCELL CONTROL.

BW&A
Barrett, Woodyard & Associates, Inc.

3495 Holcomb Bridge Road
Norcross, GA 30092
Phone (770) 810-8800
Fax (770) 810-8808

PROFESSIONAL ENGINEER
JASON CLARK
0-56990-1B
U.S. VIRGIN ISLANDS

No.	Drawing Issue Description	Date
1	Issued for Permit	06/30/23

DPW MAINTENANCE BUILDING

PARCEL NO. 6A
ESTATE SUSANNABERG
ST. JOHN, U.S VIRGIN ISLANDS

FLOOR 01 - LIGHTING PLAN

S. BREWER	2022-1512
PROJECT MANAGER	PROJECT NO.
J. CLARK	AS NOTED
PROJECT ENGINEER	SCALE
L. ORTIZ	06/30/23
DRAWN BY	DATE
	E201
FILE PLOT DATE	DRAWING NO.

ISSUED FOR CONSTRUCTION

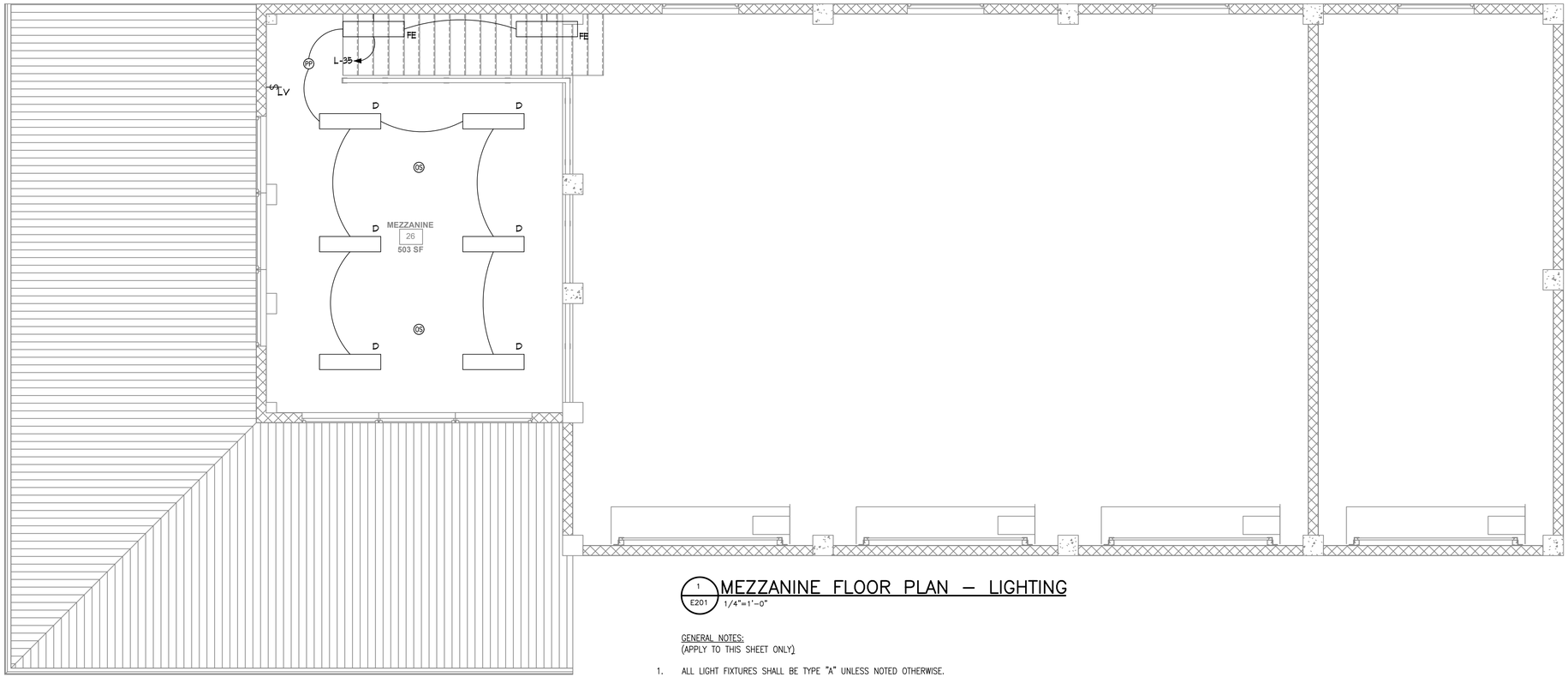

1 / E201 MEZZANINE FLOOR PLAN – LIGHTING

1/4"=1'-0"

GENERAL NOTES:
(APPLY TO THIS SHEET ONLY)

1. ALL LIGHT FIXTURES SHALL BE TYPE "A" UNLESS NOTED OTHERWISE.
2. REFER TO DRAWING E000 FOR SYMBOLS LEGEND AND LIGHTING FIXTURE SCHEDULE.
3. DRAWING IS FOR DESIGN INTENT ONLY. CONTRACTOR SHALL DETERMINE EXACT CONDUIT ROUTING IN THE FIELD.
4. MAINTAIN FIRE RESISTANCE RATING OF WALLS WITH PENETRATIONS AND RECESSED OUTLET BOXES. MAINTAIN SPACING PER IBC AND MANUFACTURER. PROVIDE UL FIRE STOPPING AS REQUIRED.
5. COORDINATE COLOR/FINISH OF FIXTURES AND COVERPLATES WITH ARCHITECT.

BW&A
Barrett, Woodyard & Associates, Inc.

3495 Holcomb Bridge Road
Norcross, GA 30092
Phone (770) 810-8800
Fax (770) 810-8808

PROFESSIONAL ENGINEER
JASON CLARK
0-56990-1B
U.S. VIRGIN ISLANDS

No.	Drawing Issue Description	Date
1	Issued for Permit	06/30/23

DPW MAINTENANCE BUILDING

PARCEL NO. 6A
ESTATE SUSANNABERG
ST. JOHN, U.S VIRGIN ISLANDS

FLOOR 02 - LIGHTING PLAN

S. BREWER	2022-1512
PROJECT MANAGER	PROJECT NO.
J. CLARK	AS NOTED
PROJECT ENGINEER	SCALE
L. ORTIZ	06/30/23
DRAWN BY	DATE
	E202
FILE PLOT DATE	DRAWING NO.

ISSUED FOR CONSTRUCTION

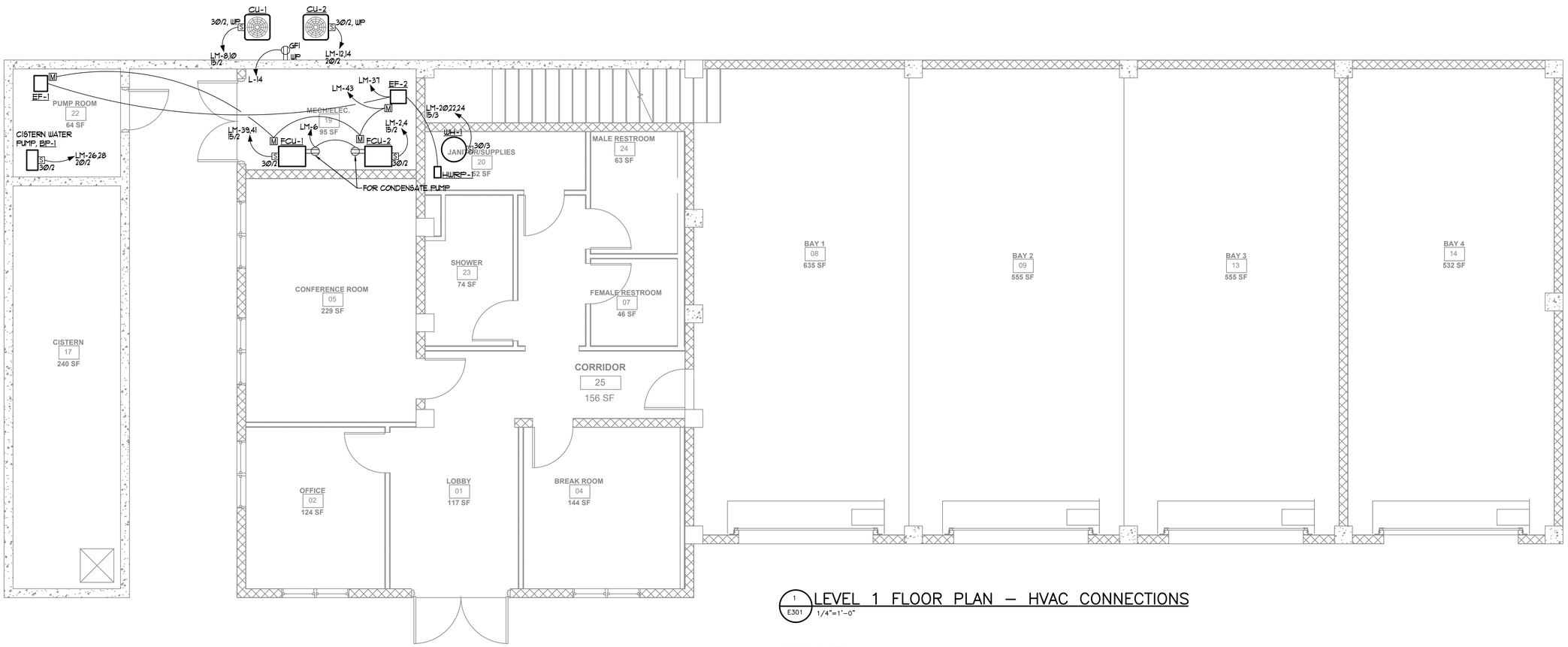

1 E301 LEVEL 1 FLOOR PLAN – HVAC CONNECTIONS
1/4"=1'-0"

GENERAL NOTES:
(APPLY TO THIS SHEET ONLY)

1. REFER TO DRAWING E000 FOR SYMBOLS LEGEND.
2. ALL DEVICES SHALL BE CONSIDERED NEW UNLESS NOTED OTHERWISE. THE LETTERS "EX" ADJACENT TO A DEVICE INDICATES EXISTING.
3. ALL NEW DEVICES SHALL COMPLY WITH BASE BUILDING STANDARDS.
4. ALL HVAC DISCONNECTS ARE PROVIDED BY DIVISION 23 UNLESS NOTED OTHERWISE OR IDENTIFIED ON PLANS.
5. MAINTAIN INTEGRITY OF PARTIAL CIRCUITS TO EXISTING DEVICES DISRUPTED DURING DEMOLITION.
6. CIRCUIT NUMBERS ARE SHOWN FOR INTENT ONLY. FIELD VERIFICATION WILL DETERMINE BRANCH CIRCUITS AVAILABLE FOR USE BY THIS TENANT. BRANCH CIRCUITS USED SHOULD BE NOTED AND UPDATED ON ALL PANEL SCHEDULES.
7. ALL UPDATED ELECTRICAL PANEL SCHEDULES SHALL BE TYPED, NOT HAND WRITTEN.
8. HATCHING INDICATES AREA NOT IN SCOPE.

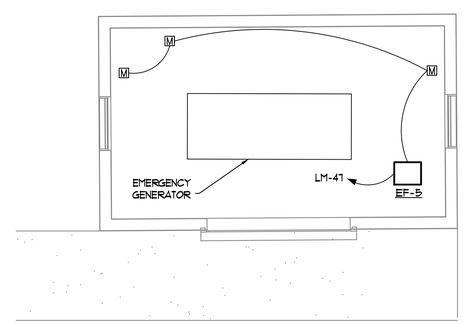

2 E301 GENERATOR ENCLOSURE PARTIAL PLAN
1/4"=1'-0"

BW&A
Barrett, Woodyard & Associates, Inc.

3495 Holcomb Bridge Road
Norcross, GA 30092
Phone (770) 810-8800
Fax (770) 810-8808

PROFESSIONAL ENGINEER
JASON CLARK
0-56990-1B
U.S. VIRGIN ISLANDS

No.	Drawing Issue Description	Date
1	Issued for Permit	06/30/23

DPW MAINTENANCE BUILDING

PARCEL NO. 6A
ESTATE SUSANNABERG
ST. JOHN, U.S VIRGIN ISLANDS

FLOOR 01 - HVAC CONNECTIONS PLAN

S. BREWER	2022-1512
PROJECT MANAGER	PROJECT NO.
J. CLARK	AS NOTED
PROJECT ENGINEER	SCALE
L. ORTIZ	06/30/23
DRAWN BY	DATE
	E301
FILE PLOT DATE	DRAWING NO.

ISSUED FOR CONSTRUCTION

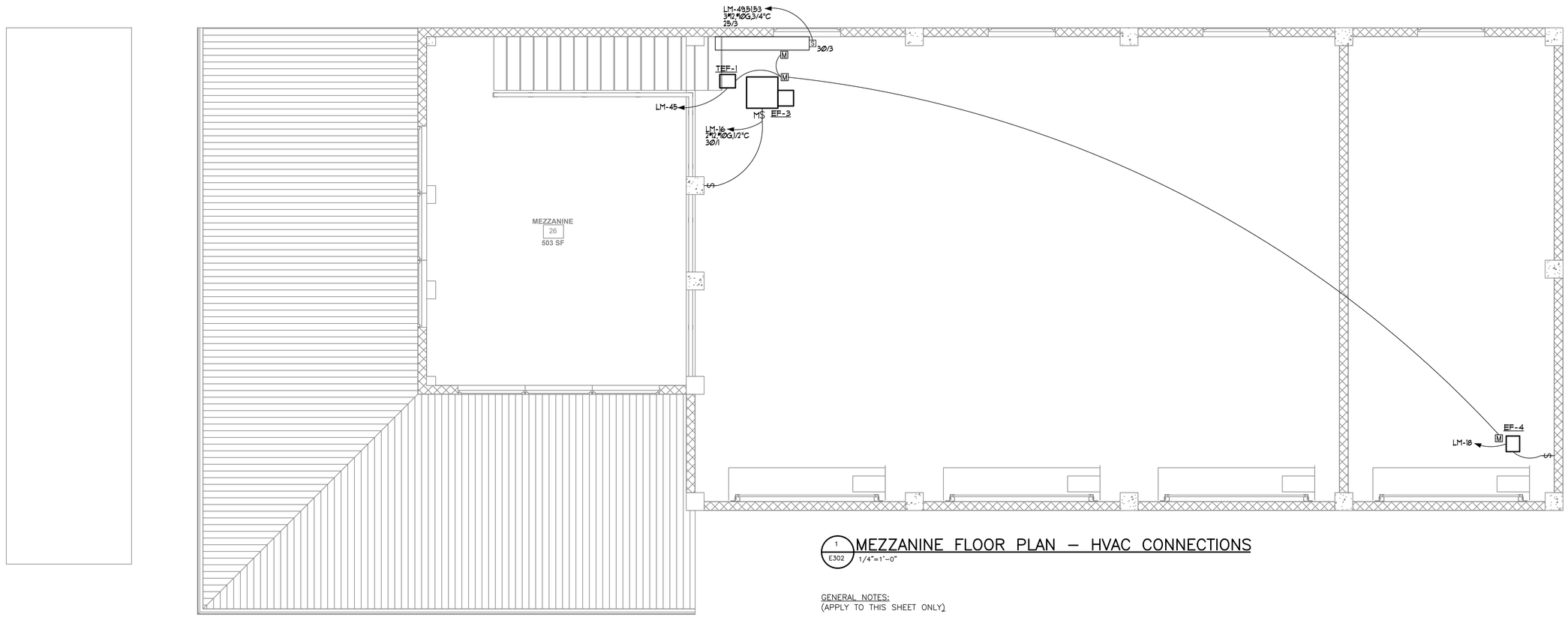

1 E302 MEZZANINE FLOOR PLAN – HVAC CONNECTIONS

1/4"=1'-0"

GENERAL NOTES:
(APPLY TO THIS SHEET ONLY)

1. REFER TO DRAWING E000 FOR SYMBOLS LEGEND.
2. ALL DEVICES SHALL BE CONSIDERED NEW UNLESS NOTED OTHERWISE. THE LETTERS "EX" ADJACENT TO A DEVICE INDICATES EXISTING.
3. ALL NEW DEVICES SHALL COMPLY WITH BASE BUILDING STANDARDS.
4. ALL HVAC DISCONNECTS ARE PROVIDED BY DIVISION 23 UNLESS NOTED OTHERWISE OR IDENTIFIED ON PLANS.
5. MAINTAIN INTEGRITY OF PARTIAL CIRCUITS TO EXISTING DEVICES DISRUPTED DURING DEMOLITION.
6. CIRCUIT NUMBERS ARE SHOWN FOR INTENT ONLY. FIELD VERIFICATION WILL DETERMINE BRANCH CIRCUITS AVAILABLE FOR USE BY THIS TENANT. BRANCH CIRCUITS USED SHOULD BE NOTED AND UPDATED ON ALL PANEL SCHEDULES.
7. ALL UPDATED ELECTRICAL PANEL SCHEDULES SHALL BE TYPED, NOT HAND WRITTEN.
8. HATCHING INDICATES AREA NOT IN SCOPE.

BW&A
Barrett, Woodyard & Associates, Inc.

3495 Holcomb Bridge Road
Norcross, GA 30092
Phone (770) 810-8800
Fax (770) 810-8808

PROFESSIONAL ENGINEER
JASON CLARK
0-56990-1B
U.S. VIRGIN ISLANDS

No.	Drawing Issue Description	Date
1	Issued for Permit	06/30/23

DPW MAINTENANCE BUILDING

PARCEL NO. 6A
ESTATE SUSANNABERG
ST. JOHN, U.S VIRGIN ISLANDS

FLOOR 02 - HVAC CONNECTIONS PLAN

S. BREWER	2022-1512
PROJECT MANAGER	PROJECT NO.
J. CLARK	AS NOTED
PROJECT ENGINEER	SCALE
L. ORTIZ	06/30/23
DRAWN BY	DATE
FILE PLOT DATE	DRAWING NO. E302

ISSUED FOR CONSTRUCTION

ABBREVIATIONS

A/C	ABOVE CEILING
AD	ACCESS DOOR
ADJ	ADJUSTABLE
AFF	ABOVE FINISHED FLOOR
AUTO	AUTOMATIC
AC	AIR CONDITIONING
AHU	AIR HANDLING UNIT
ARP	ACID RESISTANCE PIPING
BAL	BALANCING
B/F	BELOW FLOOR
B/G	BELOW GRADE
BHP	BRAKE HORSEPOWER
BCO	BASE CLEANOUT
CW	COLD WATER (DOMESTIC)
CO	CLEANOUT
DN	DOWN
DR	DRAIN
do	DITTO
DWG	DRAWING
EA	EACH
ECC	ECCENTRIC
EFF	EFFICIENCY
EOD	EMERGENCY OVERFLOW DRAIN
EWT	ENTERING WATER TEMPERATURE
FAV	FRESH AIR VENT
FCO	FLOOR CLEANOUT
FD	FLOOR DRAIN
FLR	FLOOR
FOB	FLAT ON BOTTOM
FOT	FLAT ON TOP
FPM	FEET PER MINUTE
FPS	FEET PER SECOND
FT	FEET
G	GATE
GA	GAUGE
GPM	GALLONS PER MINUTE
GL	GLOBE
GCO	GRADE CLEANOUT
HD	HUB DRAIN
HP	HORSEPOWER
HTG	HEATING
HW	HOT WATER (DOMESTIC)
HWR	HOT WATER RETURN
HWRR	HOT WATER REVERSE RETURN
HWS	HOT WATER SUPPLY
ID	INSIDE DIMENSION
IN	INCHES
KW	KITCHEN WASTE
LB	POUNDS
LWR	LOOP WATER RETURN
LWS	LOOP WATER SUPPLY
MIN	MINIMUM
MAX	MAXIMUM
MFR	MANUFACTURER
NC	NORMALLY CLOSED
NG	NATURAL GAS
NFGH	NON-FREEZE GROUND HYDRANT
NFWH	NON-FREEZE WALL HYDRANT
NO	NORMALLY OPEN
NOM	NOMINAL
OD	OVERFLOW DRAIN
PSI	POUNDS PER SQUARE INCH
RAD	RADIUS
RED	REDUCER
RS	REFRIGERANT SUCTION
RTU	ROOFTOP UNIT
SAN	SANITARY
SQ	SQUARE
ST	STORM
TEMP	TEMPERATURE
TYP	TYPICAL
UON	UNLESS OTHERWISE NOTED
V	VENT
VA	VALVE
VTR	VENT THRU ROOF
WC	WATER COLUMN
WHA	WATER HAMMER ARRESTOR
WT	WEIGHT
W	WASTE

PLUMBING LEGEND

	COLD WATER
	HOT WATER
	HOT WATER RECIRCULATION
	VENT
	SANITARY WASTE
	GAS
	WORK TO BE REMOVED
	FLOOR DRAIN
	HOSE BIBB
	FLOOR CLEAN-OUT
	WALL CLEAN-OUT
	GATE VALVE
	BALL VALVE

PLUMBING FIXTURE SCHEDULE

TAG	FIXTURE	CW	HW	SAN/ WASTE	VENT	REMARKS
P-1	WATER CLOSET, FLOOR-MOUNT	1/2"	-	4"	2"	
BASIS OF DESIGN: Kohler Kingston Comfort Height K-25077-SS. Fixture shall be vitreous china, elongated bowl, 1.28 gpf, floor-mounted, tank-type water closet. Fixture shall be two-piece, have Class Five flushing system, and shall include chrome trip level, open-front contoured toilet seat Kohler Stronghold K-4731-SA or approved equal, chrome-plate supply stops and level, tank attachment kit, tank cover, flush valve unit, anti-siphon float valve, bolt cap covers, etc. as needed for a full and complete system.						
P-2	LAVATORY, WALL-MOUNT	1/2"	1/2"	2"	2"	
BASIS OF DESIGN: Kohler Soho K-2084. Fixture shall be white vitreous china, wall-mount lavatory with concealed carrier and anchoring screws; single hole punch, and 1 1/4" drain. Faucet shall be Symmons S6350B Dia ActivSense battery powered, sensor faucet with 0.5 gpm aerator. Provide with chrome plated tailpieces, chrome grid drain, P-trap, loose key supply stops and all other trim. Fixture shall be installed to meet all ADA requirements. Provide and install point of use mixing valve rated in accordance with ASSE 1070 on the hot water connection.						
P-3	URINAL, WALL-MOUNT	3/4"	--	2"	2"	
BASIS OF DESIGN: Kohler Dexter, Model K-5452-ET. Fixture shall be white vitreous china, wall-mount, siphon jet urinal with 3/4" top spud and 0.125 gpf. Flush valve shall be manual operated Kohler K-13520-CP 0.125 gpf or approved equal.						
P-4	JANITOR'S SINK	1/2"	1/2"	3"	2"	
BASIS OF DESIGN: Stern-Williams Serviceptor Model SB-900. Fixture shall be a Terrazzo floor service sink, 24" x 24" x 12" high, complete with one-piece stainless steel cap all-around top edge, cast brass 3" caulked drain with stainless steel strainer. Faucet set shall be Stern-Williams T-10-VB sink fitting complete with wall brace, hose end, vacuum breaker and chrome finish. Provide and install 24" tall stainless steel splash guards on all adjacent walls.						
P-5	SHOWER	1/2"	1/2"	2"	2"	
BASIS OF DESIGN: Shower compartment shall be as specified by Architect. Shower faucet shall be Kohler Purist K-TS14423-4-CP valve trim with lever handle and K-P8304-KS-NA Rite-Temp pressure balanced valve body. Shower headset shall be Kohler Purist K-22178-G handshower kit with slide bar, hose and 1.75 gpm handshower. Coordinate all accessories for a full and complete ADA installation.						
P-6	BREAK SINK	1/2"	1/2"	2"	2"	
BASIS OF DESIGN: Elkay Model LR2521. Break sinks shall be single compartment, 18 gauge stainless steel with sound-deadening, 25" x 21-1/4" outside dimensions, 21" x 15-3/4" inside dimensions with an 8" depth. Faucet punching shall be 3 hole and shall be complete with Kohler Model K-15173, single handle faucet with 10" swing spout, and hand spray. Provide stainless steel removable crumb cup strainers and drains complete with service stops, tailpieces, P-trap and all trim.						
FD	FLOOR DRAIN	1/2" TP	--	3" U.O.N.	2"	

ELECTRIC WATER HEATER SCHEDULE

I.D. TAG	TYPE OF WATER HEATER	TANK CAPACITY (GALLONS)	RECOVERY @ 100°F (GPH)	POWER INPUT (KW)	VOLTS/ PHASE	BASIS OF DESIGN	REMARKS
WH-1	ELEC TANK	52	16	4.0	208/3	A.O. SMITH DEN	(1)

(1) PROVIDE EXPANSION TANK ON CW INLET; WATTS SERIES PLT OR EQUAL SIZED PER MANUFACTURER'S RECOMMENDATIONS.

PUMP SCHEDULE

I.D. TAG	FLUID	TYPE OF PUMP	FLOW (GPM)	HEAD (FT.)	MAX. NPSHR (FT.)	MAX. RPM	MOTOR H.P.	VOLTS/ PHASE	MINIMUM EFFICIENCY (%)	BASIS OF DESIGN	REMARKS
BP-1	WATER	WELL PUMP	10	70	-	-	1	208/1	-	GRUNDFOS JP PS 16 07 177	(1)
HWRP-1	WATER	RECIRC.	5	20	-	-	1/12	120/1	-	B&G SERIES PL	(2)

(1) SELF-PRIMING, BASE-MOUNTED WELL PUMP WITH INTEGRAL PRESSURE SWITCH. PROVIDE WITH BLADDER TYPE PRESSURE TANK.
(2) PROVIDE WITH STARTER, DISCONNECT, TIMER AND AQUASTAT.

BW&A

Barrett, Woodyard & Associates, Inc.

3495 Holcomb Bridge Road
Norcross, GA 30092
Phone (770) 810-8800
Fax (770) 810-8808

PROFESSIONAL ENGINEER
CHRISTOPHER STYLES
1784-E
U.S. VIRGIN ISLANDS

No.	Drawing Issue Description	Date
1	Issued for Permit	06/30/23

DPW MAINTENANCE BUILDING

PARCEL NO. 6A
ESTATE SUSANNABERG
ST. JOHN, U.S VIRGIN ISLANDS

PLUMBING LEGEND, ABBREVIATIONS AND SCHEDULES

S. BREWER	2022-1512
PROJECT MANAGER	PROJECT NO.
E. CURTIS	AS NOTED
PROJECT ENGINEER	SCALE
E. CURTIS	06/30/23
DRAWN BY	DATE
	P001
FILE PLOT DATE	DRAWING NO.

ISSUED FOR CONSTRUCTION

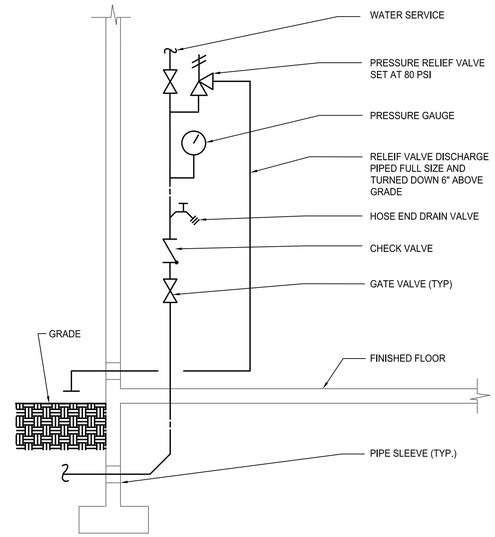

1 P002 **WATER SERVICE RISER**

NO SCALE

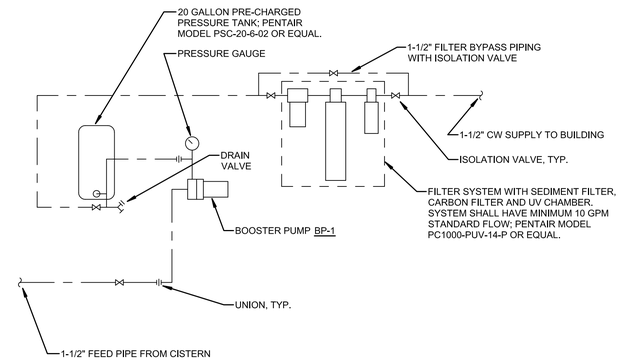

2 P002 **BOOSTER PUMP AND FILTER DETAIL**

NO SCALE

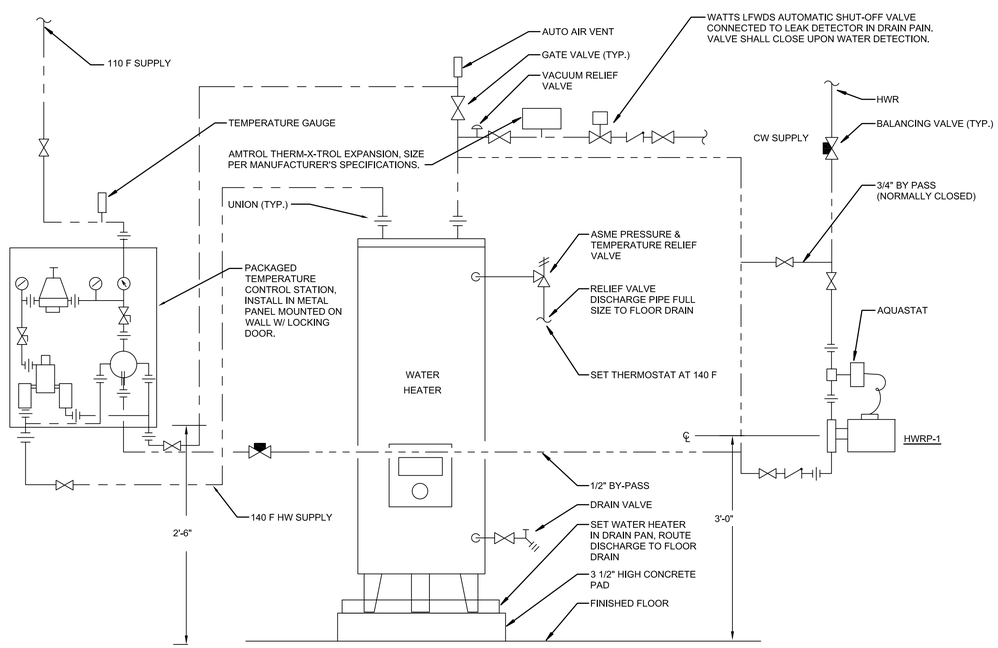

3 P002 **WATER HEATER DETAIL**

NO SCALE

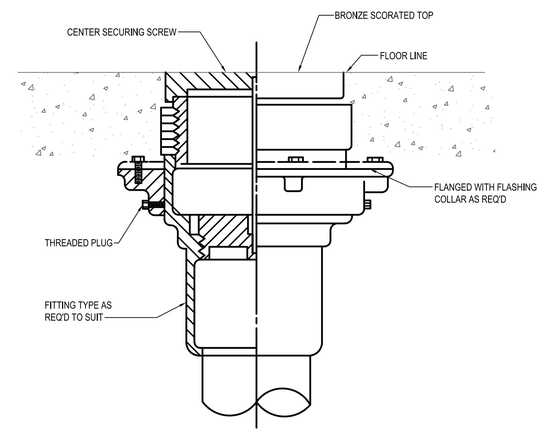

5 P002 **FLOOR CLEANOUT DETAIL**

NOT TO SCALE

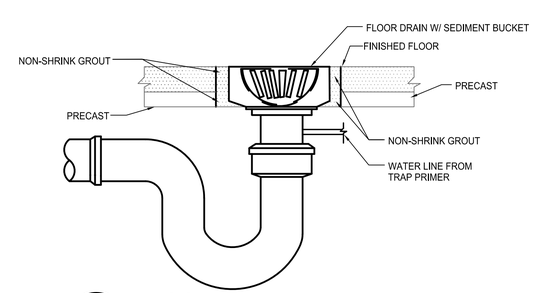

4 P002 **FLOOR DRAIN DETAIL**

NO SCALE

BW&A
Barrett, Woodyard & Associates, Inc.

3495 Holcomb Bridge Road
Norcross, GA 30092
Phone (770) 810-8800
Fax (770) 810-8808

PROFESSIONAL ENGINEER
CHRISTOPHER STYLES
1784-E
U.S. VIRGIN ISLANDS

No.	Drawing Issue Description	Date
1	Issued for Permit	06/30/23

DPW MAINTENANCE BUILDING

PARCEL NO. 6A
ESTATE SUSANNABERG
ST. JOHN, U.S VIRGIN ISLANDS

PLUMBING DETAILS

S. BREWER	2022-1512
PROJECT MANAGER	PROJECT NO.
E. CURTIS	AS NOTED
PROJECT ENGINEER	SCALE
E. CURTIS	06/30/23
DRAWN BY	DATE
	P002
FILE PLOT DATE	DRAWING NO.

ISSUED FOR CONSTRUCTION

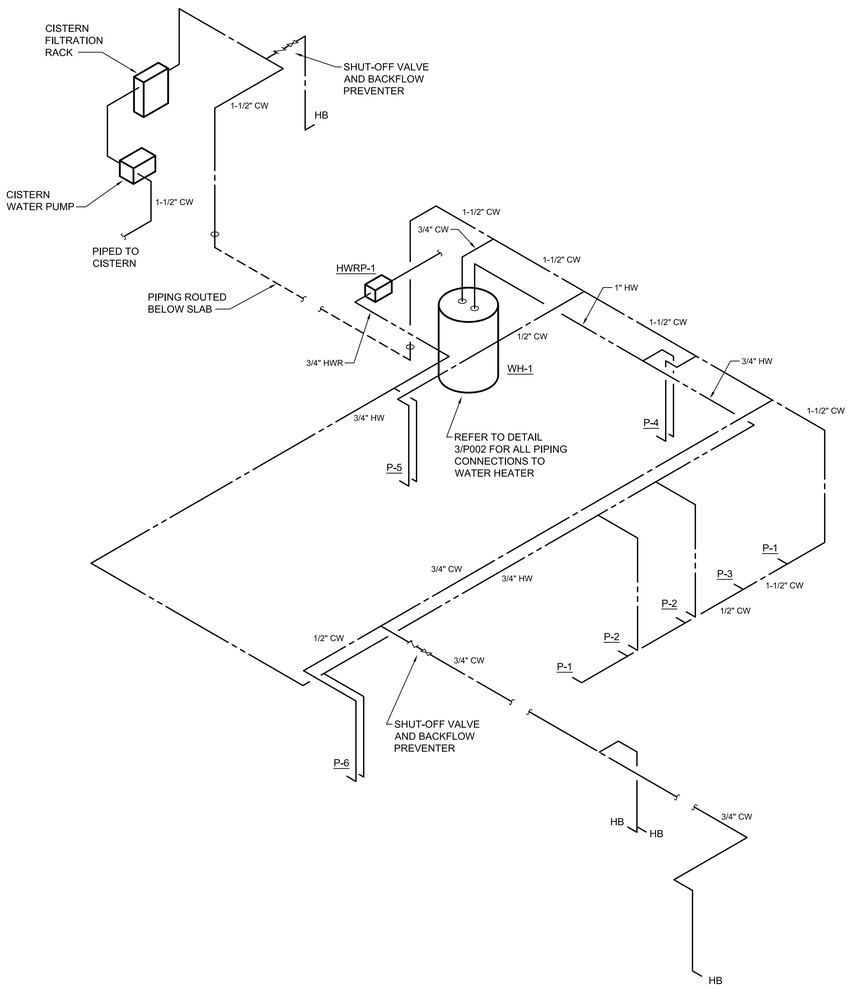

2 P003 PLUMBING RISER DIAGRAM – DOMESTIC WATER

NO SCALE

GENERAL NOTES:

1. REFER TO FIXTURE CONNECTION SCHEDULE ON SHEET P001.

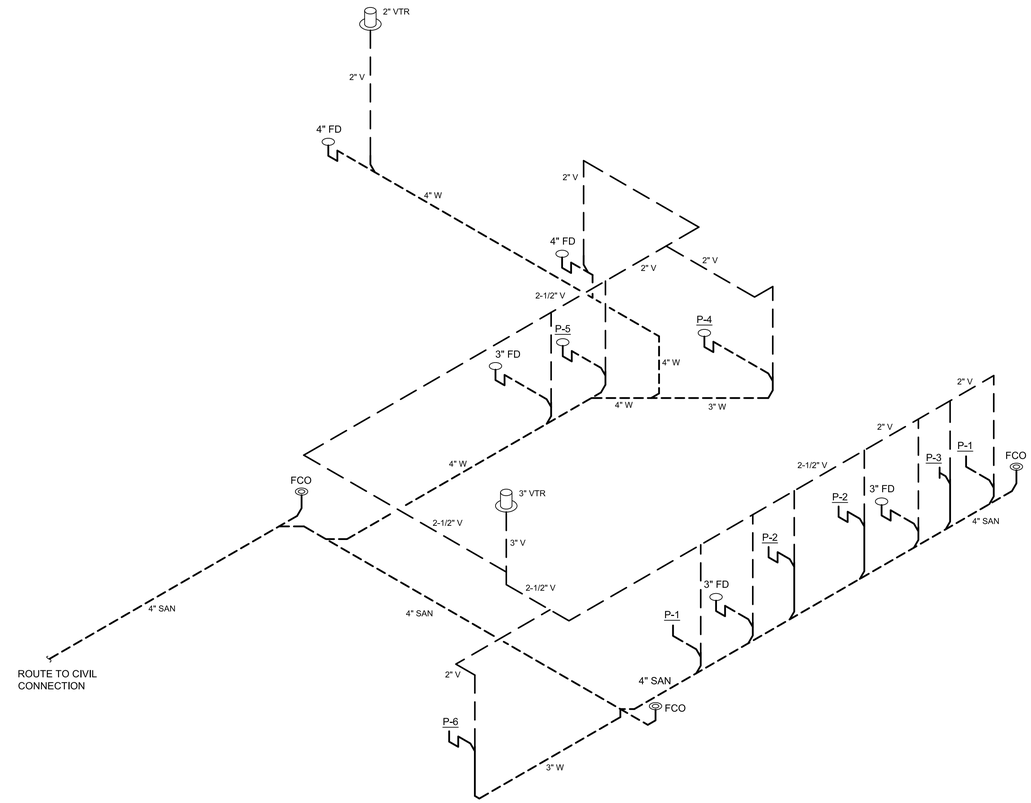

1 P003 PLUMBING RISER DIAGRAM – WASTE & VENT

NO SCALE

GENERAL NOTES:

1. REFER TO FIXTURE CONNECTION SCHEDULE ON SHEET P001.

BW&A

Barrett, Woodyard & Associates, Inc.

3495 Holcomb Bridge Road
Norcross, GA 30092
Phone (770) 810-8800
Fax (770) 810-8808

PROFESSIONAL ENGINEER
CHRISTOPHER A. CURTIS
1784-E
U.S. VIRGIN ISLANDS

No.	Drawing Issue Description	Date
1	Issued for Permit	06/30/23

DPW MAINTENANCE BUILDING

PARCEL NO. 6A
ESTATE SUSANNABERG
ST. JOHN, U.S VIRGIN ISLANDS

PLUMBING RISER DIAGRAMS

S. BREWER	2022-1512
PROJECT MANAGER	PROJECT NO.
E. CURTIS	AS NOTED
PROJECT ENGINEER	SCALE
E. CURTIS	06/30/23
DRAWN BY	DATE
	P003
FILE PLOT DATE	DRAWING NO.

ISSUED FOR CONSTRUCTION

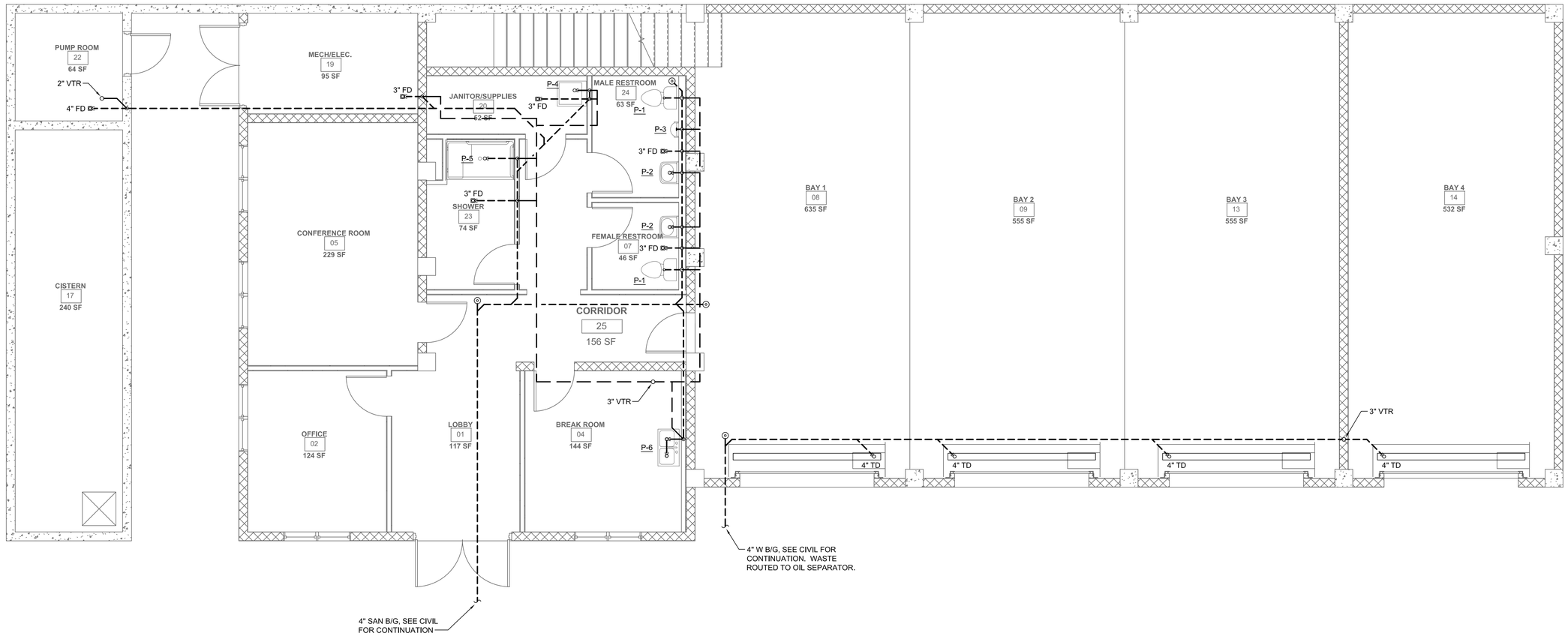

1 / P101 LEVEL ONE FLOOR PLAN – WASTE & VENT PLUMBING

1/4"=1'-0"

BW&A

Barrett, Woodyard & Associates, Inc.

3495 Holcomb Bridge Road
Norcross, GA 30092
Phone (770) 810-8800
Fax (770) 810-8808

PROFESSIONAL ENGINEER
CHRISTOPHER ELVIS
1784-E
U.S. VIRGIN ISLANDS

No.	Drawing Issue Description	Date
1	Issued for Permit	06/30/23

DPW MAINTENANCE BUILDING

PARCEL NO. 6A
ESTATE SUSANNABERG
ST. JOHN, U.S VIRGIN ISLANDS

LEVEL ONE FLOOR PLAN - WASTE & VENT PLUMBING

S. BREWER	2022-1512
PROJECT MANAGER	PROJECT NO.
E. CURTIS	AS NOTED
PROJECT ENGINEER	SCALE
E. CURTIS	06/30/23
DRAWN BY	DATE
	P101
FILE PLOT DATE	DRAWING NO.

ISSUED FOR CONSTRUCTION

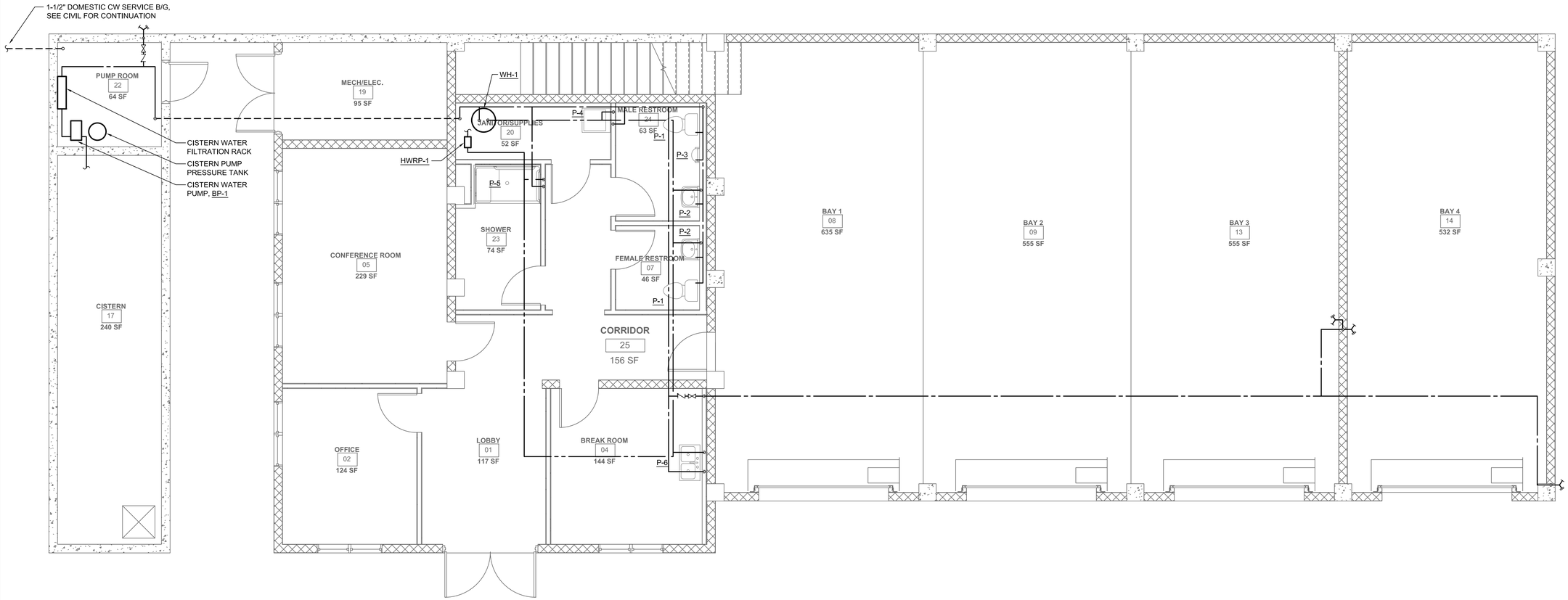

1 / P102 LEVEL ONE FLOOR PLAN – DOMESTIC WATER PLUMBING
1/4"=1'-0"

BW&A

Barrett, Woodyard & Associates, Inc.

3495 Holcomb Bridge Road
Norcross, GA 30092
Phone (770) 810-8800
Fax (770) 810-8808

PROFESSIONAL ENGINEER
CHRISTOPHER LYLES
1784-E
U.S. VIRGIN ISLANDS

No.	Drawing Issue Description	Date
1	Issued for Permit	06/30/23

DPW MAINTENANCE BUILDING

PARCEL NO. 6A
ESTATE SUSANNABERG
ST. JOHN, U.S VIRGIN ISLANDS

LEVEL ONE FLOOR PLAN - DOMESTIC WATER PLUMBING

S. BREWER	2022-1512
PROJECT MANAGER	PROJECT NO.
E. CURTIS	AS NOTED
PROJECT ENGINEER	SCALE
E. CURTIS	06/30/23
DRAWN BY	DATE
	P102
FILE PLOT DATE	DRAWING NO.

ISSUED FOR CONSTRUCTION